NO. 67 NOTES FROM THE SHOP $3.95

Woodsmith®

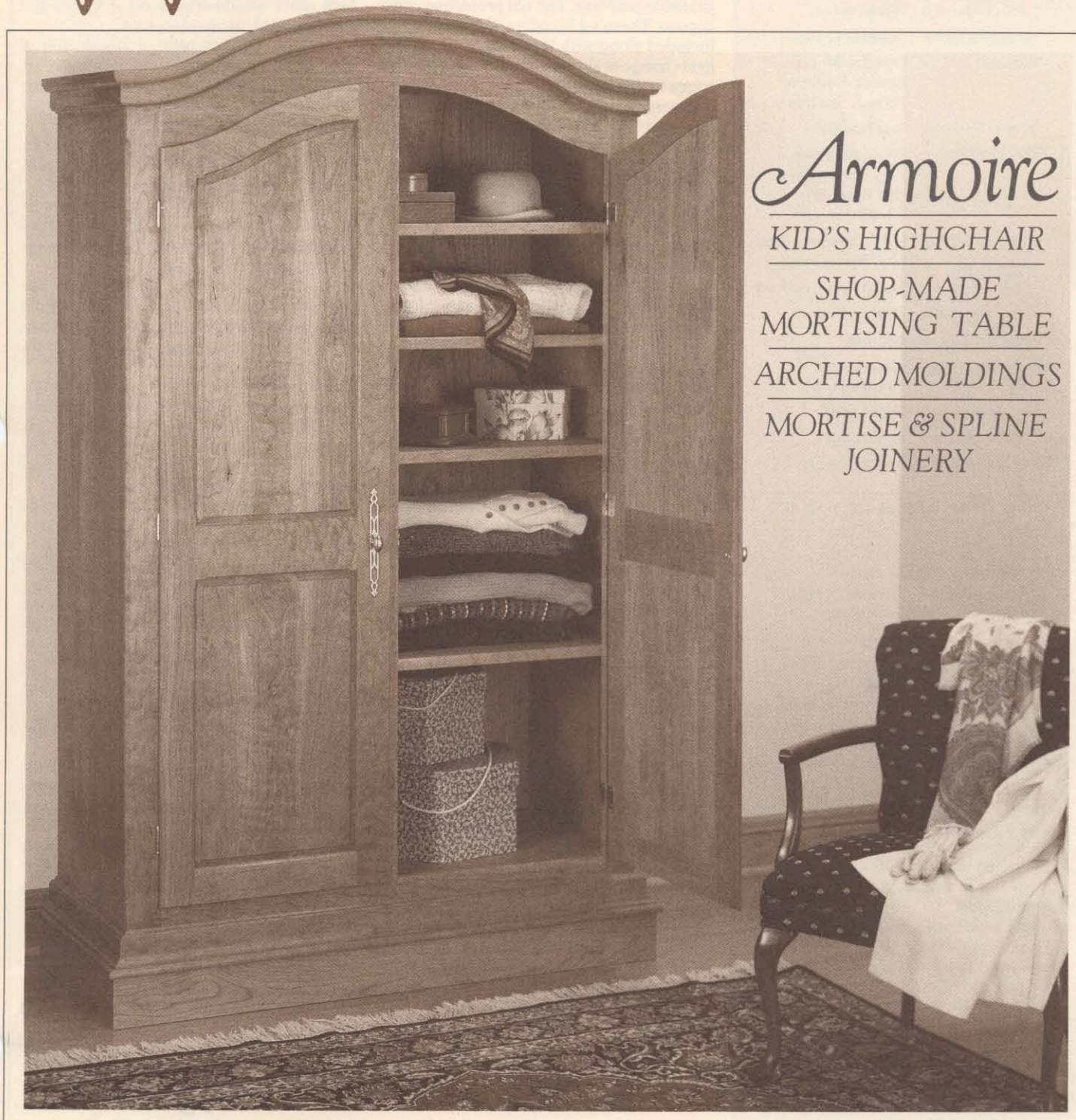

Armoire

KID'S HIGHCHAIR

SHOP-MADE MORTISING TABLE

ARCHED MOLDINGS

MORTISE & SPLINE JOINERY

No. 67 February, 1990

Woodsmith

Editor **Donald B. Peschke**
Design Director **Ted Kralicek**
Managing Editor **Douglas L. Hicks**
Assistant Editors **Douglas M. Lidster**, **Kent A. Buckton**, **Terry J. Strohman**
Project Designer **Ken Munkel**
Technical Illustrators **David Kreyling**, **Cary Christensen**, **Rod Stoakes**, **Chris Glowacki**
Customer Service **Linda Morrow, Mgr.**, **Lisa Thompson**
Project Supplies **Leslie Ann Gearhart**
Controller **Paul E. Gray**
Computer Operations **Ken Miner**
Administrative Assts. **Cheryl Scott**, **Sandy Baum**
Sourcebook **Jean Carey**
Shop Manager **Steve Curtis**
Building Maintenance **Archie Krause**

WOODSMITH STORES

Store Managers:
St. Louis, MO **Jon Behrle**
Berkeley, CA **Michael DeHaven**
Des Moines, IA **Kent Welsh**

WOODSMITH (ISSN 0164-4414) is published bimonthly (February, April, June, August, October, December) by Woodsmith Publishing Co., 2200 Grand Ave., Des Moines, IA 50312.
Woodsmith is a registered trademark of Woodsmith Publishing Co.
©Copyright 1990 by Woodsmith Publishing Company. All rights reserved.
Subscriptions: One year (6 issues) $15.95. Two years (12 issues) $27.95. Canada and Foreign: add $2.00 per year, U.S. funds only. Single copy price, $3.95.
Second Class Postage Paid at Des Moines, IA and at additional offices.
Postmaster: Send change of address to Woodsmith, Box 491, Mt. Morris, IL 61054.
Subscription Questions? Call 800–435–0715 (IL residents: 800–892–0753). 7:30 AM to 8:30 PM, CST, weekdays.
Sample Copy: We will send a free sample copy of *Woodsmith* to anyone. Just send us his/her name and address.

EDITOR'S COLUMN

Sawdust

As soon as this issue arrived, you probably noticed some changes. *Woodsmith* now comes wrapped in a bio-degradable poly-bag. The old protective cover is gone. There's a *Woodsmith Store* catalog included along with the issue. And the biggest change of all — we've added eight more pages to this issue.

I want to talk a little about all of these changes. Twelve years ago, the very first issue of *Woodsmith* was published with only eight pages. During the next three years, we gradually increased the size to 24 pages. It's been at that size for the past eight years . . . until now.

As you can imagine, I've been looking forward to these extra pages for a long time. It means that we're finally able to present more information and get involved with bigger, more complex projects.

In the past, we had tough decisions to make about large projects like the Armoire that's in this issue. Should we design it with all the nice details like an arched top and raised-panel doors, even if it takes up half the issue to show how to do it? Or, should we simplify it so it can be put on fewer pages?

Even if we did show the full-blown version, we certainly wouldn't have room to add a companion article, like the one showing how to make the arched molding for the top of the Armoire. Now we can get into all these design details.

CONTENTS PAGE. With the added pages, we were able to make some other changes. First, we've added a Contents page. This should make it easier to find articles if you want to refer back to them in the future.

TIPS & TECHNIQUES. One of the most popular pages in *Woodsmith* is Tips and Techniques, which for years was the first article in each issue. It's still first, but we've shifted it to the spread after the Contents page — and it's been expanded to two pages. You get more tips . . . and more opportunity to send in your ideas.

As we were making the other changes, we decided to change the payment policy for tips sent in by readers. The amount paid for each tip is determined by the amount of space given to the tip. The better the tip, the more the amount of space it gets, and the more money you get.

The minimum amount paid for a tip that's published is $15. But to encourage bigger and better tips, the payment goes up to $100 if we devote an entire page to the tip. Naturally, we're looking for good ideas that will help other woodworkers. So if you've got some good ideas, send them in.

DETAILS. The last page of *Woodsmith* is now called Final Details. Up to now, we've only had enough room to show one picture of each project. But there are usually some details that deserve a closer look.

That's what this new page is for. We can show some of the details that make the projects in this issue interesting.

POLY-BAG. Okay, all those additions to *Woodsmith* are great, but why did you decide to mail it in a plastic bag? What about the environment? Why *plastic?*

Believe me, it wasn't an easy decision. I'm concerned about the use of plastic, and it's effect on our environment. But I'm also concerned about protecting each issue on its way through the mail.

Most of the people who get *Woodsmith*, save the issues. So they want to receive them in good shape. Anything made of paper can easily get damaged, torn, soiled, or bent. So we have a standard policy to replace any issue that's damaged in the mail.

But I decided that the best way to protect the issue in the first place was to put it in a plastic bag . . . a *bio-degradable* poly-bag.

Woodsmith is published in Iowa, which is famous for one other product — corn. The governer of our state is encouraging Iowa businesses to use poly-bags made with corn starch. (That's what that symbol on the outside of the poly-bag is all about.) By adding corn starch to the plastic, it supposedly makes the bag bio-degradable.

The jury is still out on all of this. But it's the best technology available today.

THE WOODSMITH STORE CATALOG. Along with this issue of *Woodsmith*, we've enclosed a copy of the new *Woodsmith Store* catalog.

I've run out of room to talk very much about this catalog, except to say that the basic idea is to present more information about *Woodsmith* Back Issues and Project Supplies. In the past, we could only show the covers of back issues. The new catalog format allows us to show individual projects.

NEXT ISSUE. The next issue of *Woodsmith* (No. 68) will be mailed during the week of April 9, 1990.

Don

A LOOK INSIDE

Contents

Tips & Techniques 4 *Six great tips from fellow woodworkers: 1. A tenon cutting jig. 2. Clamping to a drill press. 3. Edge-gluing trick. 4. Dovetail layout. 5. Simple burnisher. 6. Polishing Plexiglas.*

Highchair 6 *Angled legs don't necessarily mean a complex project. Simple joinery and knock-down fasteners make quick work of this sturdy maple Highchair.*

Mortising Table 12 *This table may change the way you approach woodworking. It holds a router horizontally so cutting an accurate mortise is a snap.*

Mortise & Spline 14 *A hybrid joint that doesn't require a lot of tedious fitting.*

Shop Notes 16 *Tips from inside the Woodsmith Shop: 1. Burnishing a miter. 2. Raising an arched panel. 3. Securing panels in frames. 4. Working with warp.*

Armoire 18 *A graceful curved top and raised panel doors create a stately heirloom project.*

Arched Molding 26 *Making an arched molding doesn't have to be difficult. Here are detailed instructions for every step of the job.*

Talking Shop 30 *A router and the right type of bit are what really make the Mortising Table work.*

Sources 31 *The place to look for the hardware and supplies needed for all the projects in this issue.*

page 6

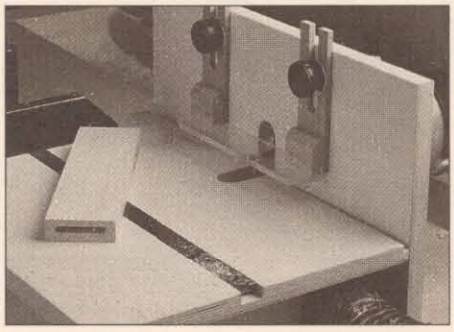

page 12

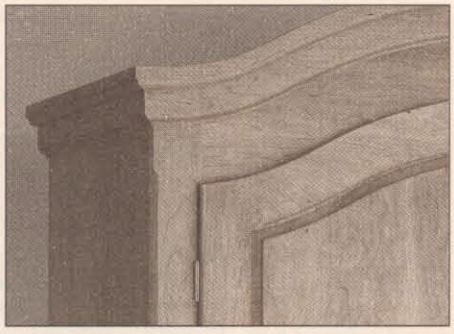

page 18

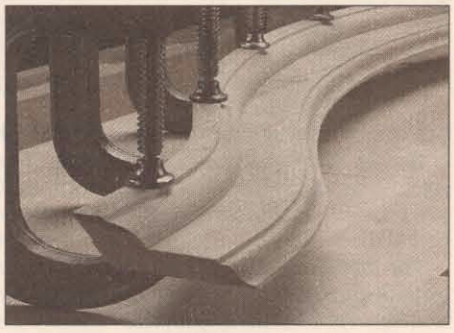

page 26

Tips & Techniques

TENON CUTTING JIG

■ After I built the tenon cutting jig shown in *Woodsmith* No. 63, I added a few features that make it even more functional.

First, I made it easier to replace the vertical stop. After using the jig for awhile, the bottom end of the stop gets torn up and needs to be replaced.

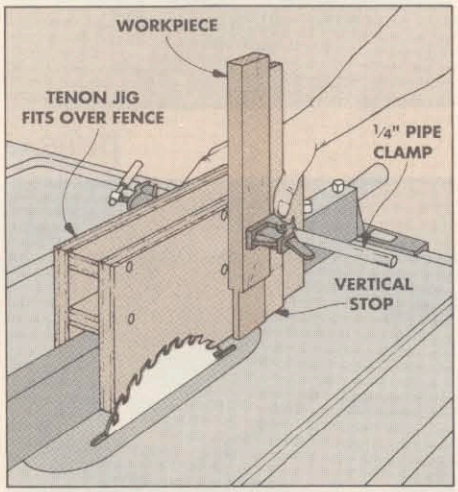

The idea I had was to cut a shallow (⅛"-deep) dado down the face of the jig. This way all I had to do was cut a new stop to fit in the dado and it would automatically be square to the table. After ripping the stop, I screwed it in place. (Be sure the screws are above the path of the blade.)

My second idea involved a clamping system to hold the workpiece tight against the face of the jig. If the piece isn't held tight, it can tilt out from the jig and creates a tapered cut on the end of the tenon.

The clamping system I came up with is just a small pipe clamp that fits over a ¼" I.D. pipe. (The one I used is a Jorgenson Pony clamp No. 54.)

To mount the clamp, drill a hole through the jig slightly larger than the pipe. Position the hole so the pipe will be set back about ⅛" from the front edge of the stop. This is to allow the workpiece to fit flush against the stop. (When replacing the stop, I just cut a notch in the front edge of the new stop so it fit around the pipe.)

Now push the pipe through the hole and add the sliding clamp jaw to the side of the jig with the stop.

Then add the screw head on the other end of the pipe. To keep the screw head in position, I drilled a hole through the flange on the clamp head and fastened it to the jig with a screw.

To use this clamp set up, make sure the bottom end of the workpiece is flat on the saw's table, and the back edge against the stop. Then you only need one hand on the jig to push it along the table saw fence.

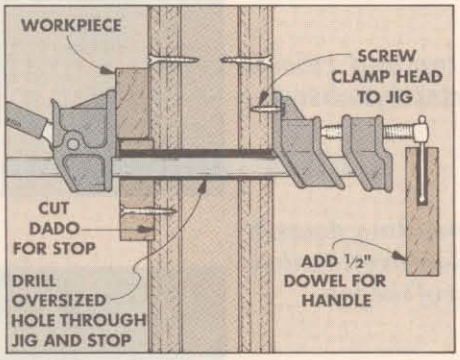

One last tip. To make it easier to tighten the clamp head, I glued a ½"-dia. dowel over the end of the clamp handle.

Emmett Hoggatt
Eyota, Minnesota

CLAMP TO DRILL PRESS TABLE

■ Whenever I want to clamp a workpiece to my drill press with C-clamps, the ribs that are cast into the underside of the table are always in the way.

The ribs are spaced so they're always right where I want the clamp to be. And they're so narrow that if you try to clamp to the edge of one, the clamp slips right off as it's tightened.

To solve this problem, I cut and glued some scrap blocks to fit between the ribs.

Because I occasionally use the slots in the table, I didn't want to permanently fix the blocks to the table. So I just put a few drops of glue from a hot glue gun on each scrap, then stuck the blocks between the ribs. (You can also use double-sided carpet tape to mount the blocks.)

To remove the blocks, insert a small punch through the slot and tap them out, or pry them off with a screwdriver.

Tom Gunter
Corpus Christi, Texas

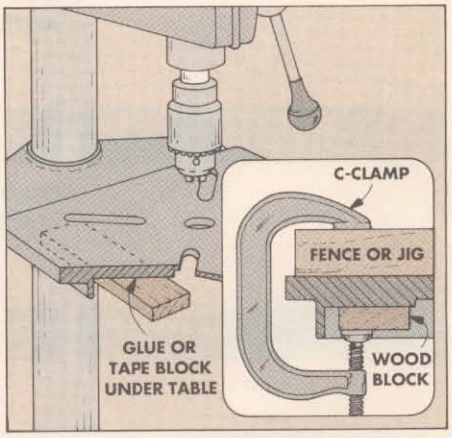

GLUING WITH INNER TUBES

■ Whenever I clamp boards together with pipe clamps, I put waxed paper between the pipe and the glue joint. If you don't, the iron pipe will react with the glue and create a black stain on the wood.

The only problem with using waxed paper is that it's hard to keep it in place while trying to jockey the boards and clamps into position.

Recently I started using old bicycle inner tubes instead of waxed paper. I cut the inner tube into 2" lengths, then slice them down their lengths. They'll curl right around the pipe clamp and stay in place.

Place one of these tube pieces over the pipe at each glue joint. Also, to keep the boards level, place one at each end of the pipe, near each clamp head.

Chris Glowacki
Des Moines, Iowa

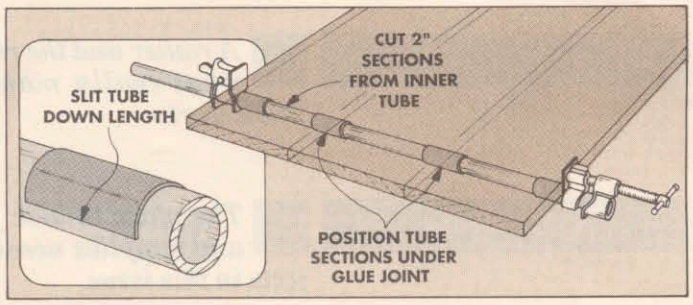

3-D DOVETAIL LAYOUT

■ After reading about dovetails in *Woodsmith* No. 66, here's another method for designing and laying out "through" dovetail joints.

One of the toughest jobs in laying out dovetails is visualizing how they will look on the actual workpieces. For example, to help visualize how the dovetails will look on the corner of a drawer, I draw them out on a 3 x 5 index card.

Cut the card the same height as the drawer, see Fig. 1. Then draw a line down the center of the card. This represents the corner of the drawer. Label one side of the line "FRONT" and the other side "SIDE."

Next draw base lines to the right and left of the centerline equal to the thickness of the drawer front and side.

Now lay out the pins and tails. (I also shade in the sections that will be end grain on the boards.)

After the pins and tails are laid out, erase the extra base lines and fold the card in half. To see what the joint will look like, hold the card against the corner of the drawer, see Fig. 2.

Once you like the layout, fold the card over on itself and hold it on the workpieces to make starter marks for the tails and pins, see Fig. 3.

Rev. Mark A. Cordes
Shoreview, Minnesota

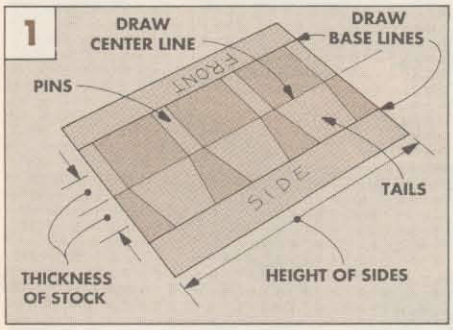

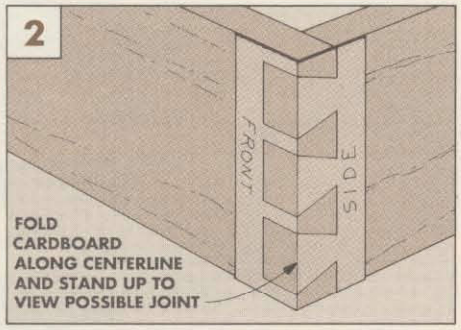

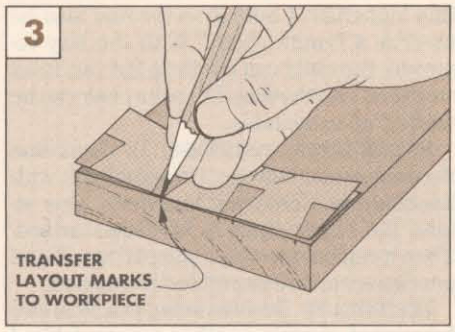

VALVE SCRAPER BURNISHER

■ Instead of buying a hardened steel burnisher to draw and form the cutting burr on cabinet scrapers, I use an old automobile engine valve. (I get all the valves I need from a local mechanic just for asking.)

To make this valve burnisher easier to use, I added a small handle that's cut from a piece of 1"-diameter dowel. After cutting the small length of dowel, drill a hole in the end of it. Then push it over the end of the valve stem to serve as a handle.

When using the burnisher, grab the dowel with one hand and the flattened head of the valve with the other. This lets you really apply pressure to the scraper blade making the job of "rolling" the burr much easier.

Charles A. Rondinelli
Fayetteville, North Carolina

Editor's Note: This valve burnisher works well. For more information on how to sharpen and use a scraper, refer to Woodsmith *No. 39.*

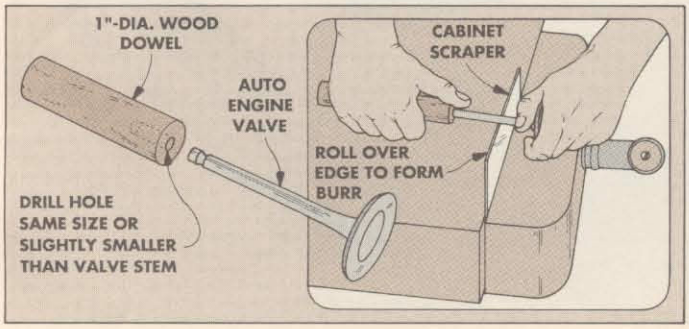

CLEAR EDGE PLEXIGLAS

■ After cutting the Plexiglas windscreen on my Classic Roadster (shown in *Woodsmith* No. 51), I still had to get the edges smooth and clear.

To do this, I used three steps. First, to remove the burrs along the edge, I tightened a fine file flat in the vise. Then I rubbed the edges of the Plexiglas over the file and removed the burrs.

After filing off the burrs, I sanded the edges with 240, and then 400-grit wet/dry sandpaper. (To keep the edges flat, lay the sandpaper down flat, and rub the edge of the Plexiglas over the sandpaper.)

Sanding leaves the edges "cloudy." To get a clear edge, I use a buffing wheel. But if you don't have a buffing wheel, use the next best thing — toothpaste. Toothpaste is a very fine abrasive and works the same way on Plexiglas as it does on your teeth.

To use toothpaste, put a small dab on a clean white cloth and rub it along the edge a few times. Then just wipe off the toothpaste and look down into the edge of the Plexiglas.

If the edge isn't clear after the first attempt, just repeat the process until it is. Then rinse off the piece and dry it with a soft cloth.

Gil Strubel
Hagerstown, Maryland

SEND IN YOUR TIPS

If you would like to share a tip, or have a better way of doing something in your shop, send in your idea to *Woodsmith*, Tips and Techniques, 2200 Grand Ave., Des Moines, Iowa 50312.

We will pay upon publication $15 to $100 (depending on the published length of the tip). Please include an explanation and a sketch or photo (we'll draw a new one).

Highchair

How do you make a highchair that's easy to assemble today, and easy to disassemble tommorow? Use mortise and spline joints to join the legs, and hold the parts together with knock-down Confirmat screws.

I've always had a few complaints about metal and plastic highchairs. First, many of them are wobbly and poorly constructed. Second, once the child has outgrown the need for a tray, the highchair is no longer useful. And finally, they're difficult to store.

VERSATILE. To extend the usable life of this highchair, I built it so it could also be used as a "youth chair." With the tray removed, the child can climb up the two front steps and into the seat. Then the chair can be pushed up to the table.

KNOCK-DOWN FASTENERS. To overcome the problem of storage, I assembled it with knock-down Confirmat fasteners. This allows the entire chair to be disassembled. Then it can be stored (or shipped to a friend or relative) and reassembled in minutes.

TECHNIQUES. Besides being practical and functional, there's another reason I liked building this project. I got to do some problem-solving with a couple of new techniques.

One problem involved cutting a recess in the tray. Any time you use two different router bits to make a recess, it's difficult to get them to cut at exactly the same depth. I solved the problem by making the perimeter of the tray recess slightly deeper than the center section. This solves the depth problem and gives the tray a "milk moat" for extra protection against spills.

Another problem was joining the angled rails to the legs of the highchair. The solution was a mortise and spline joint. It's simple to make, especially if you use the Mortising Table shown on pages 12 and 13.

MATERIALS AND FINISH. I built the highchair out of ¾"-thick hard maple. It's very tight grained (no splinters) and will take a lot of abuse (holds up well to teething). Then for added protection and durability I applied three coats of polyurethane.

HARDWARE. Finally, a word about the tray hardware and the safety straps. I used a tray catch that allows the tray to lift off for cleaning or hang to one side so the kids can easily be put in or taken out. I also added a nylon safety strap to hold them in once you finally manage to get them into the chair. (Both the hardware and the safety strap are available through *Woodsmith* Project Supplies, see page 31. You supply the kid.)

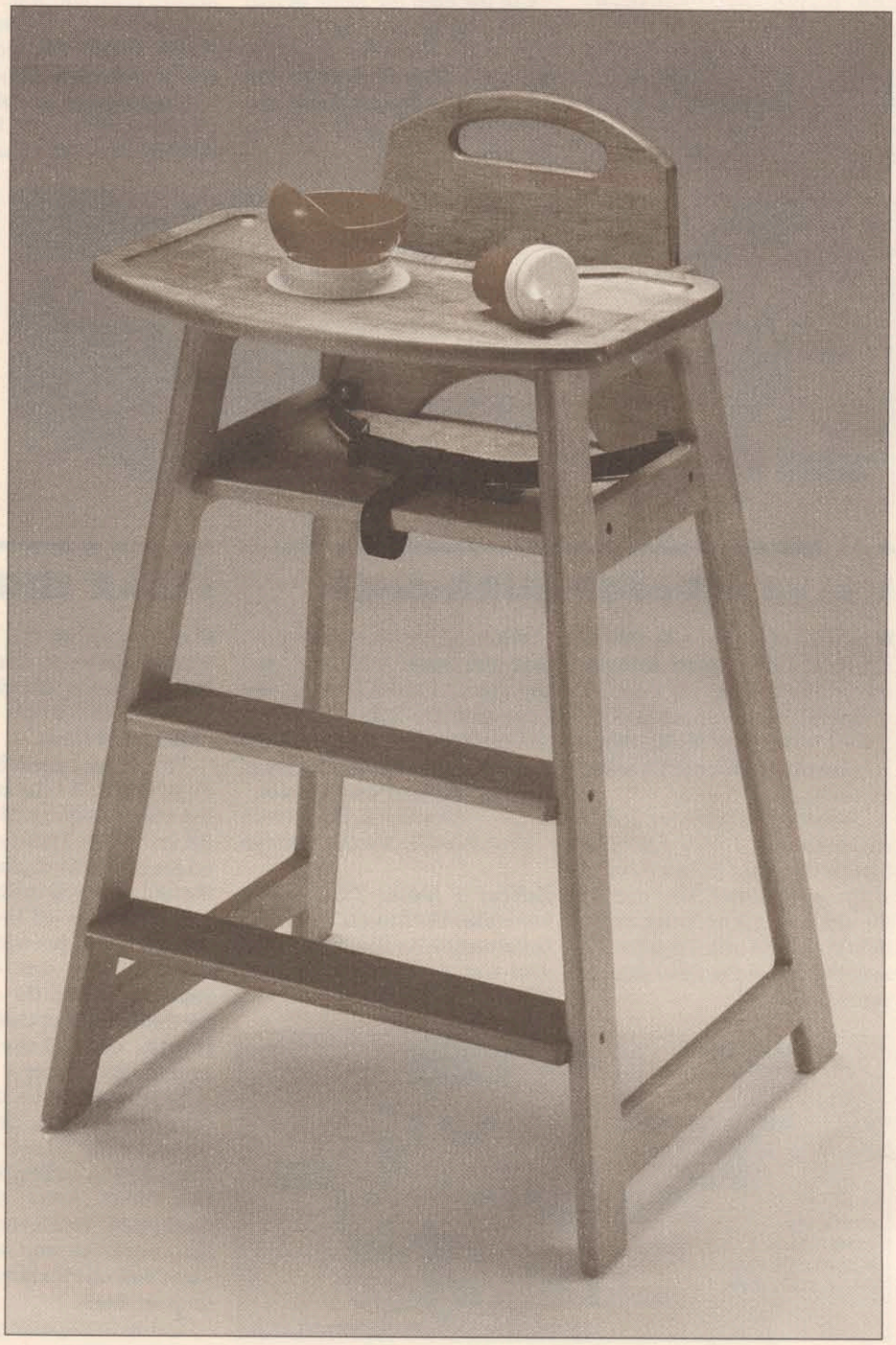

EXPLODED VIEW

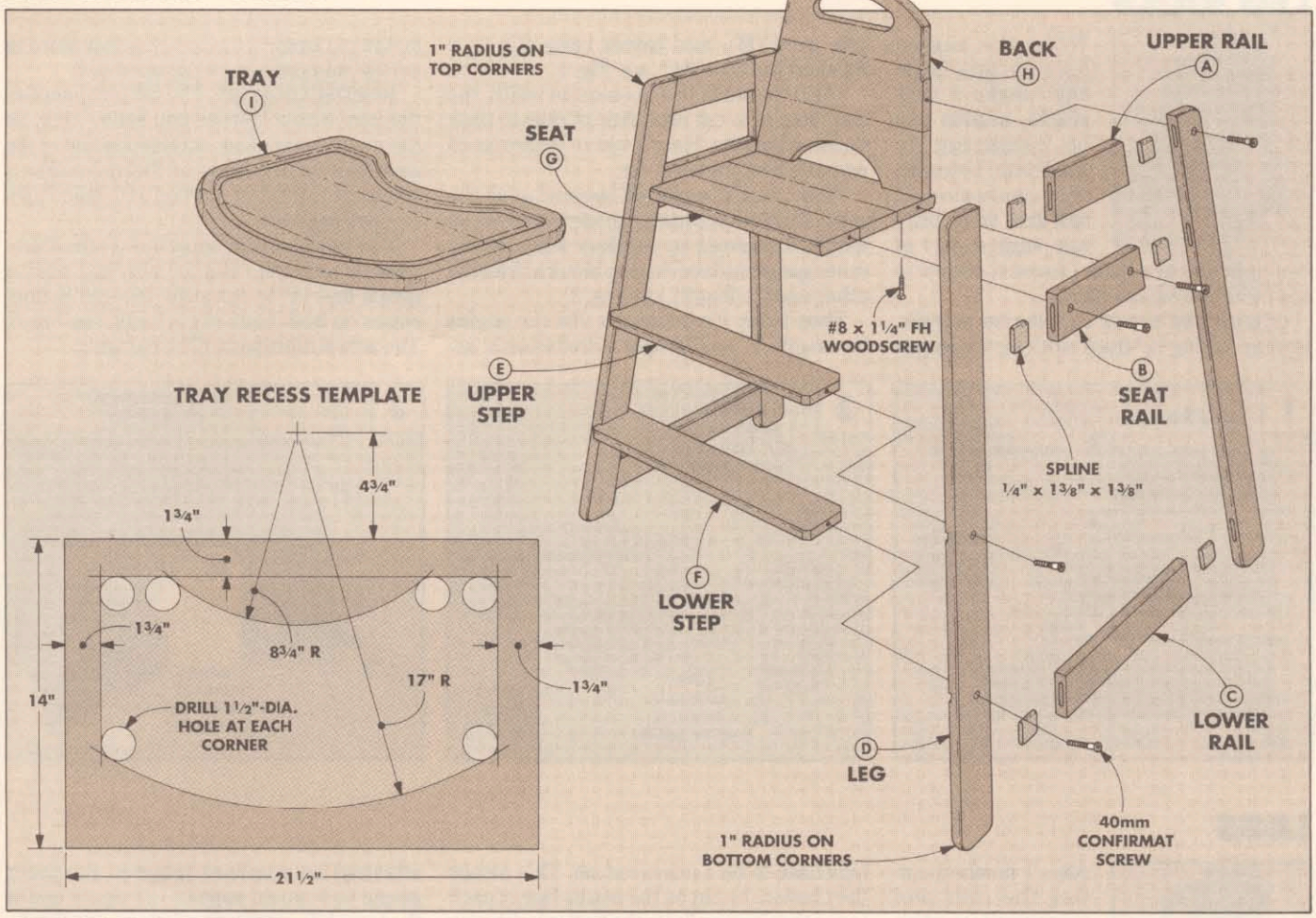

SPLINE DETAIL

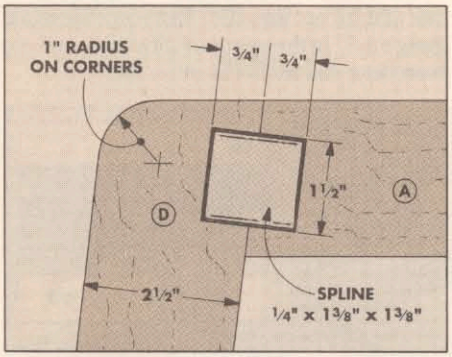

CONNECTOR DETAIL

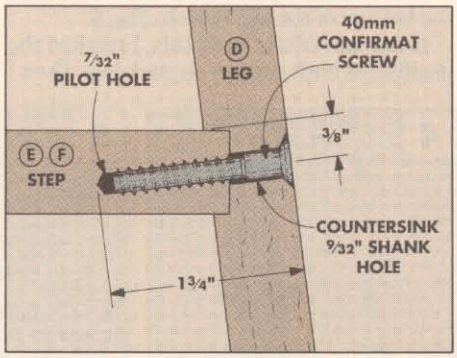

EDGING DETAIL

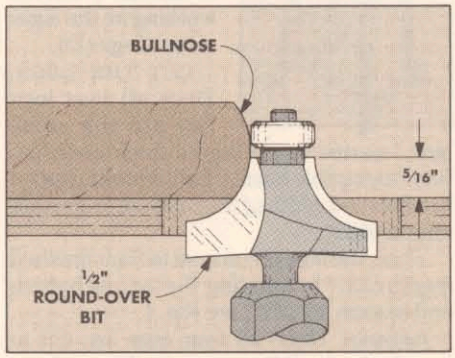

MATERIALS AND SUPPLIES

WOOD PARTS

A	Upper Rails (2)	¾ x 2½ x 7¼
B	Seat Rails (2)	¾ x 2½ x 8 11/16
C	Lower Rails (2)	¾ x 2½ x 13⅜
D	Legs (4)	¾ x 2½ x 32*
E	Upper Step (1)	¾ x 3½ x 16
F	Lower Step (1)	¾ x 3½ x 17⅞
G	Seat (1)	¾ x 10½ x 15*
H	Back (1)	¾ x 12¼* x 15*
I	Tray (1)	¾ x 14* x 21½*

* These are rough dimensions

SUPPLIES

- 11 Board Feet, ¾"-thick hard maple
- ¼"-thick Masonite for splines
- (10) Confirmat screws
- (2) #6 x 1¼" Fh woodscrews
- ½ Pint of satin polyurethane
- For more information on the swivel tray hardware and the safety strap, see Sources on page 31.

CUTTING DIAGRAM

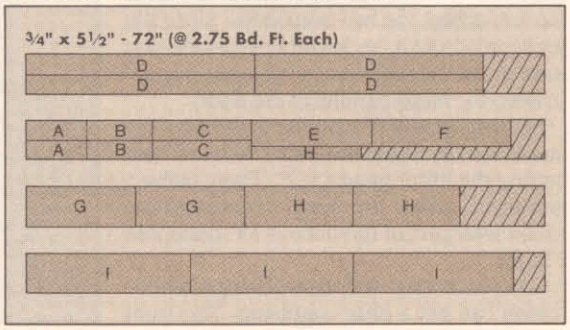

LEG RAILS

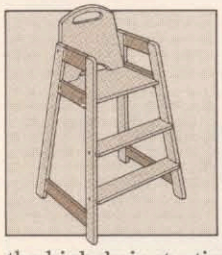

While the angled legs on this highchair make it very stable, angles can be confusing to work with. To lessen the confusion, I worked with only one angled part of the highchair at a time. I found it easiest to start with the leg rails first.

CUTTING THE RAILS. To make the six rails, start by cutting ¾"-thick stock for the **upper (A), seat (B)**, and **lower rails (C)** to a finished width of 2½", see Fig. 1.

Once the stock has been cut to width, the next step is to cut each pair of rails to their finished lengths. Here's where you're faced with the first angles to cut.

First, cut a 7° angle off one end of all the rails. Then to keep each pair of rails the same length, I screwed an auxiliary fence on my miter gauge and used a stop block to trim the other ends to length, see Fig. 2.

Shop Note: It's important that the angles be exactly 7°, so I bought a draftsman's adjustable triangle from an art supply store to set the miter gauge on the table saw.

MORTISE LOCATION. The rails are joined to the legs with a mortise and spline joint. So the next step is to lay out the position of the mortises on the ends of the rails. (For a complete article on mortise and spline joinery, see page 14.)

The mortises are centered on the thickness of each rail. But for now just mark a pencil line ½" in from the top and bottom edges on both ends of each rail, see Fig. 3. The actual mortises will be cut later.

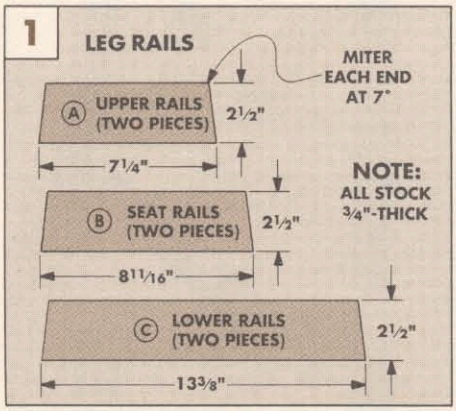

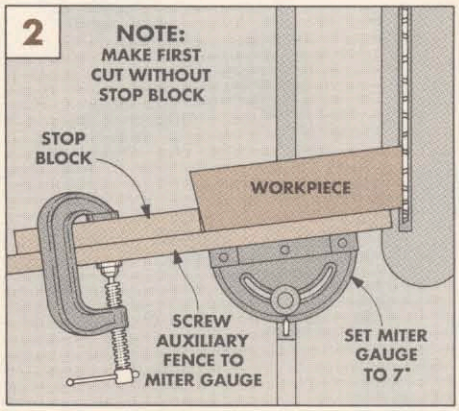

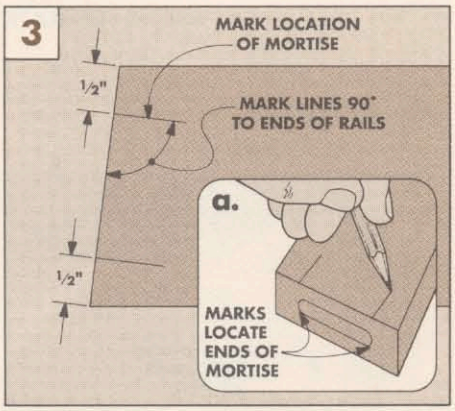

LEGS

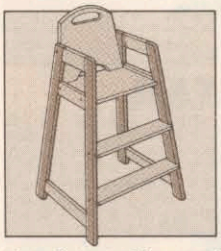

After I finished cutting the rails and marking the mortise locations, I started working on the highchair's **legs (D)**.

CUT THE LEGS. Since all four legs (D) are the same size, I started by cutting ¾"-thick stock into four manageble blanks. Each blank is ripped to a finished width of 2½" and cut to a rough length of 33".

Then, the legs (D) are cut to their finished length of 31" by mitering the top and bottom end of each leg at 7°, see Fig. 4.

DADOES. Once all four legs are cut to length, the back legs are complete and can be temporarily set aside. But the front legs still need ¾"-wide dadoes cut on their *inside* faces to accept the two front steps. Since the legs angle front to back *and* side-to-side, you have to cut the dadoes at a compound angle to keep the steps parallel to the floor.

SET THE BLADE. To cut the dadoes for the steps, start by tilting the dado blade to 7° and setting the miter gauge at 7°. Then, using a test piece, adjust the depth of cut until the *shallowest* part of the dado is ⅛" deep, see Fig. 5a.

LAY OUT THE DADOES. Here's where things can get a little confusing. The front legs have to be a *mirrored* set. This means they have to be cut on the *inside* face of each leg so they're parallel to the bottom of the leg *and* the shallow part of the dado is nearest the bottom of the leg, refer to Fig. 6.

DADO THE LEGS. To do this, I marked the position of both dadoes on each leg. Then I attached an auxiliary fence to the miter gauge so it would support the upper end of the leg while cutting the dadoes, see Fig. 5.

Cut two dadoes parallel to each other in one of the front legs (D). Then turn the miter gauge to 7° in the *opposite* direction, and cut matching dadoes in the other leg.

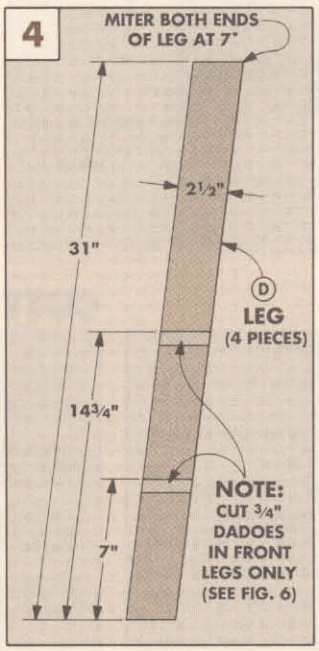

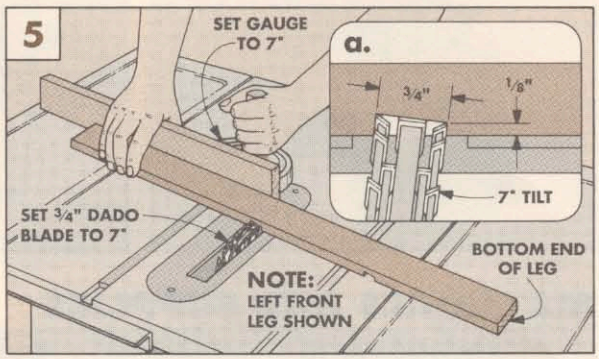

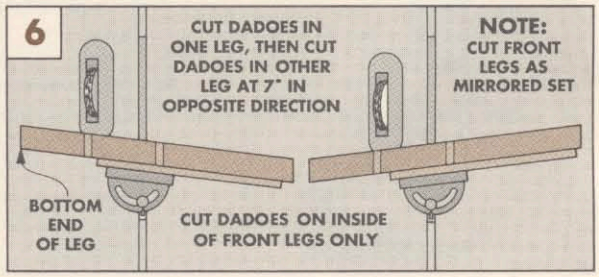

LEG FRAME ASSEMBLY

The next step is to determine the locations of the mortises on the edges of the legs. The problem is to make sure these mortises will align with the mortises on the rails (A, B, C).

DRY ASSEMBLY. To do this, I dry assembled the legs and rails to form two leg frames. To keep the bottom ends of the legs flush, push them against a straightedge clamped to the bench, see Fig. 7. Then, to position the lower rail (C), I placed a 2½"-wide spacer along the straightedge, and pushed the lower rail against this spacer.

At the top end, position the upper rail (A) between the legs so it's flush with the ends of the legs. Now clamp these two rails in place.

The seat rail (B) is positioned by sliding it between the legs until it's snug, see Fig. 7.

MORTISE LOCATIONS. With all three rails between the legs, transfer the locations of the mortises from the ends of the rails to the face of the legs, see Fig. 7a.

ASSEMBLE FRAMES. Now cut ¾"-deep mortises in the edge of the legs and in the ends of the rails, see Fig. 8. (I used the Mortising Table shown on pages 12 and 13.) Then cut splines to fit the mortises (see page 15) and glue the legs and rails together.

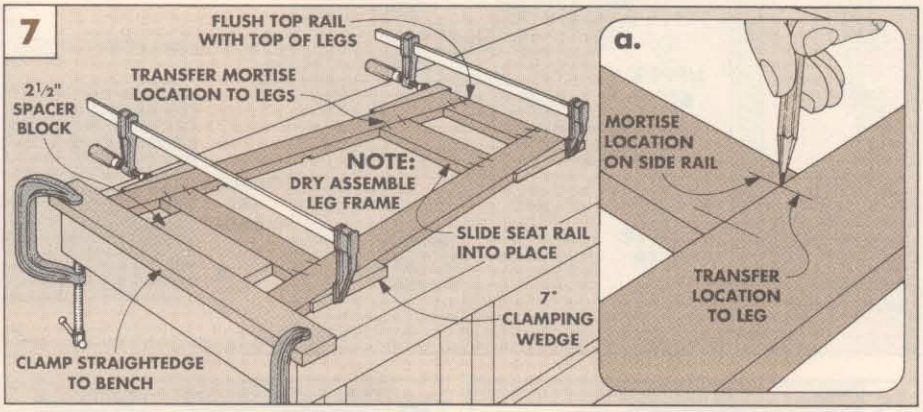

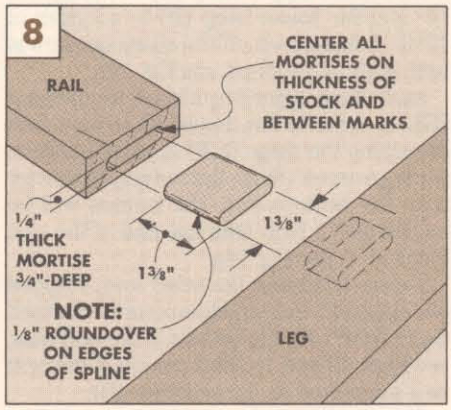

CONNECTORS

After the leg frames were assembled, I rounded the corners of the legs to a 1" radius, refer to Exploded View, page 7.

The leg frames are joined to the other parts of the highchair with Confirmat screws. These are deep-threaded screws with an untapered root that allows the joint to be easily put together and taken apart.

HOLES FOR SEAT AND BACK. In order for the fasteners to work, five slightly oversized shank holes have to be drilled into each leg frame, see Fig. 9.

To locate the two holes in the seat rail (B), start by laying out a line centered on the width of the rail, see Fig. 10. Along this centerline, mark points at each end 1" in from where the centerline meets the joint between the seat rail and the leg. Then drill 9/32"-dia. holes at these points, see Fig. 10.

After the holes in the seat rail have been drilled, locate and drill a shank hole to attach the back. This hole is located near the top end of the *back* legs only, see Fig. 11.

HOLES FOR STEPS. There are two shank holes to drill in the front legs to attach the steps. To locate these holes, extend a line from the top edge of each dado around to the outside face of the leg (D), see Fig. 12. Then measure down ⅜" from this line and drill a shank hole centered on the width of the leg, see Fig. 12.

COUNTERSINK. After all five shank holes are drilled in both leg frames, countersink each hole 1/16" deep, see Fig. 13.

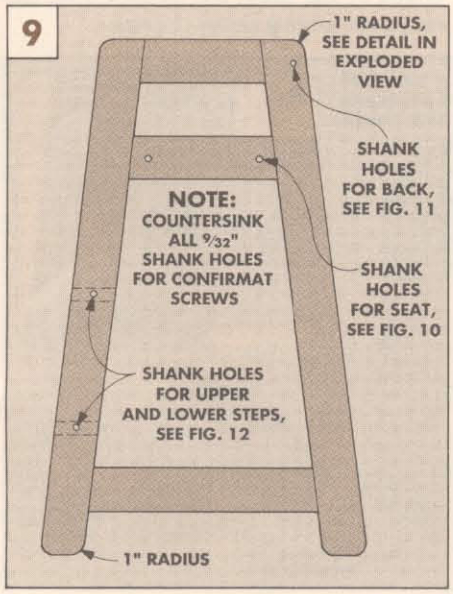

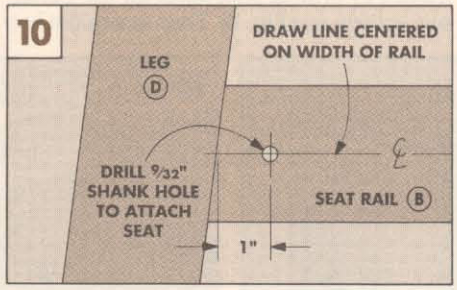

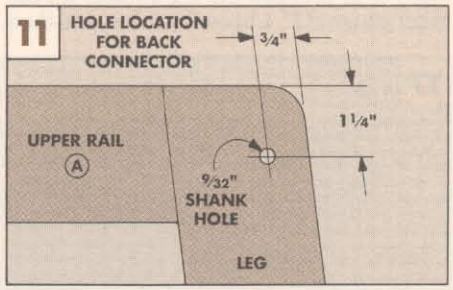

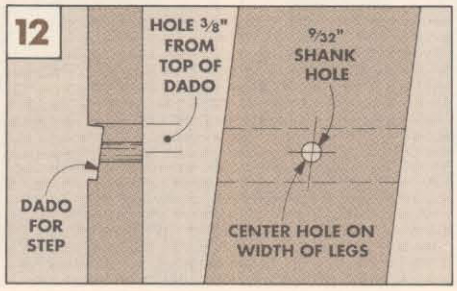

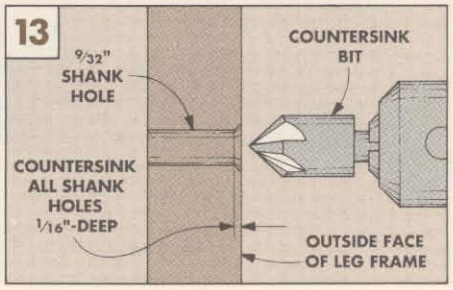

STEPS, SEAT, AND BACK

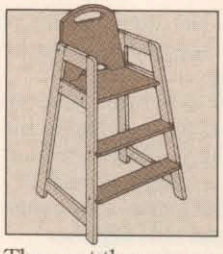

After building the leg frames, the next step is to make the upper and lower steps (E, F), seat (G), and back (H).

STEPS. First, rip the steps to a width of 3½", see Fig. 14b. Then cut the **upper step (E)** to a length of 16" and the **lower step (F)** to a length of 17⅞". I chamfered off the sharp corners at both ends of the steps, see Fig. 14b.

SEAT. Next, I glued up a blank for the **seat (G)**. In order to cut this blank to size, first dry-clamp the steps (E,F) in place between the leg frames. (Since the top step is shorter than the bottom one, the frames will be angled at 7°.) Now trim one end of the seat blank at 7°, see Fig. 14a.

Before trimming the other end, I ripped two cleats ⅞"-wide and temporarily clamped them flush with the bottom of the seat rails, see Figs. 15 and 16. This positions the seat so it's centered on the seat rails (B).

Now gradually trim off the other end of the seat at 7° until the seat fits between the leg frames when resting on top of the cleats.

PILOT HOLES. When the seat fits between the leg frames, center it front to back and clamp it in position. Then drill 7/32" pilot holes for the Confirmat screws into the ends of the seat using the holes in the seat rails as a guide, see Fig. 16.

While the drill is set up, drill pilot holes into the ends of the steps as well.

Finally, I screwed the Confirmat screws through the leg frames and into the steps (E, F) and the seat (G).

THE BACK. To make the **back (H)**, start by gluing up a ¾"-thick blank, see Fig. 17. Then bevel the bottom edge at 7°. To trim the sides to fit between the leg frames, set the miter gauge at 7°. Cut one end first, and then sneak up on the other end until it fits.

Now lay out the arcs for the hand hole and also at the top and bottom ends of the back, see Fig. 17. (A pattern for laying out the arcs is available, see page 31.)

The back can be mounted between the leg frames by drilling pilot holes for the Confirmat screws, see Fig. 18. Then fasten the bottom edge of the back to the seat with two woodscrews, see Fig. 18a.

ROUT THE EDGES. While the highchair is assembled, mark where the top edge of the leg frame meets the back, see Fig. 18. Then I routed a bullnose profile on all the exposed edges of the back, leg frames, seat, and steps, see Edging Detail on page 7.

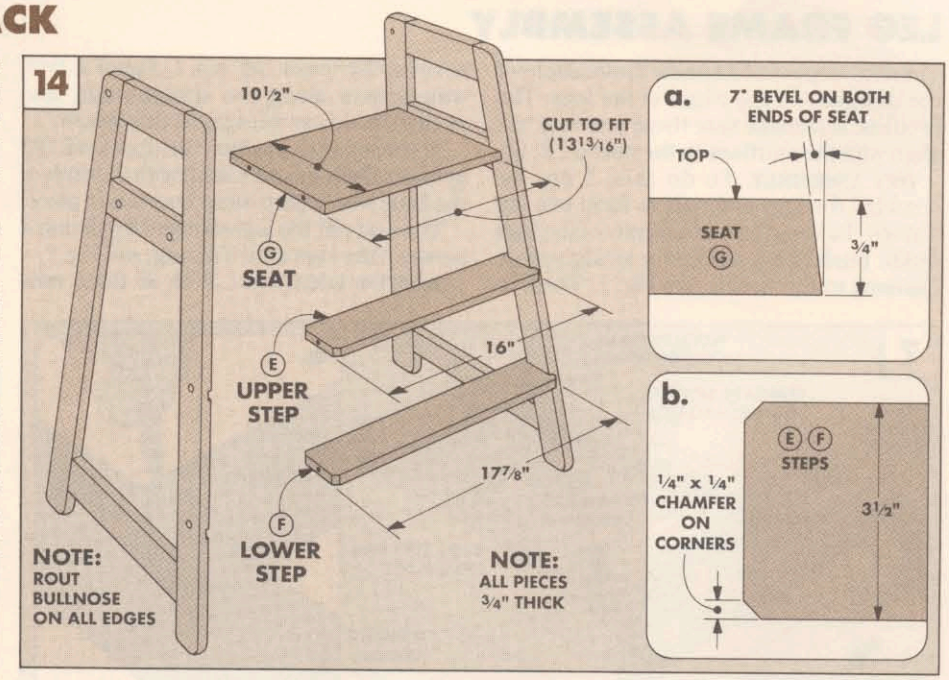

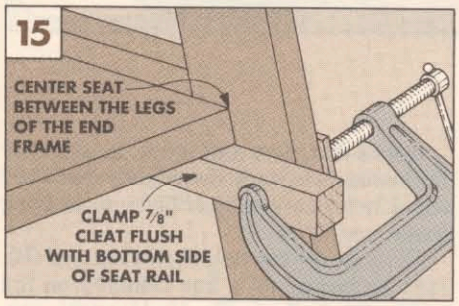

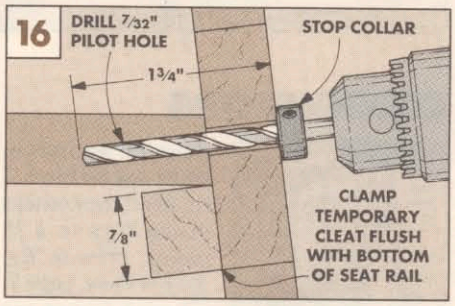

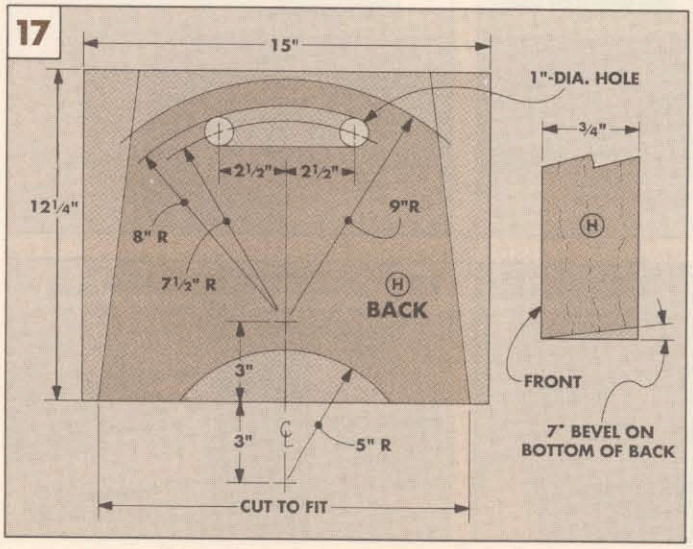

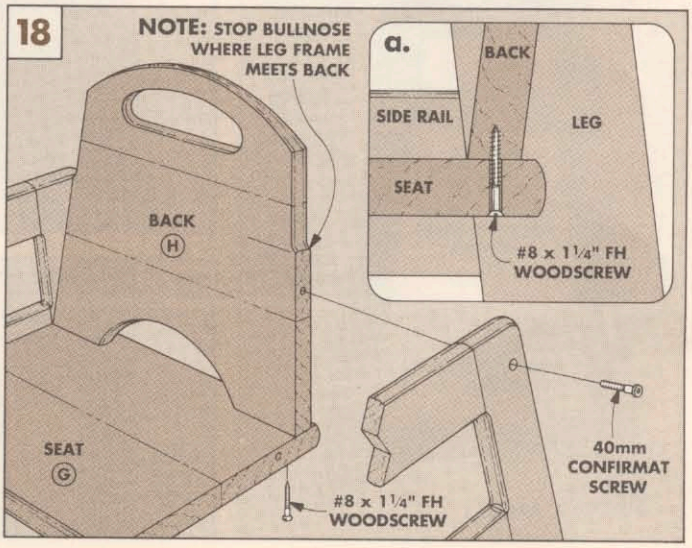

TRAY

The last thing to build is the **tray (I)**. However, the procedure for making the tray is the opposite of what you might expect — I started by routing the recess, then I cut out the tray. This way you don't have to center the recess on an irregular-shaped piece.

TEMPLATE. To rout the recess, I made a template by laying out the shape on a piece of ½" plywood. (See pattern on page 7.) Cut out the center of the template with a sabre saw and sand the edges smooth. Also, keep the piece from the center. It's used to support the router, see Fig. 19.

TRAY BLANK. After the template is cut, glue up a ¾"-thick blank for the tray. Then attach the template to the blank with double-sided carpet tape, see Fig. 19.

To support the router while routing the perimeter groove, trim 1½" off the outside edges of the cut-out center section. Then secure it to the center of the template's opening with more carpet tape.

GUIDE BUSHING. To rout the groove, mount a ⅝" guide bushing along with a ½" core box bit in the router, see Fig. 19a. The guide bushing rubs against the edge of the template while the router bit (that fits inside the bushing) does the cutting.

Note: If your bushing extends more than ½" below the base of the router, you'll have to use thicker material for the template.

FOLLOWING THE TEMPLATE. Now you're ready to make the first cut. Set the core box bit so it extends ⅜" below the bottom of the *template*, see Fig. 20a. Make a plunge cut, and then with the guide bushing rubbing against the tray template, rout around the template moving in a clockwise direction, see Fig. 20.

ROUT OUT THE CENTER. After the perimeter groove is routed, remove the template and the center support piece. Then remove the guide bushing and replace the core box bit with a straight bit, see Fig. 21a. (I used a ¾" straight bit.)

Now to rout out the waste inside the perimeter of the groove, set the bit to make a ¼"-deep cut. Rout from side-to-side while supporting the router on the center (un-cut) portion of the recess, see Fig. 21.

CUT TO SHAPE. The last step is to cut the tray to its finished shape. I used a compass, to scribe a border 1" from the edge of the groove, see Fig. 22. Then cut along the scribed line with a saber saw. Complete the tray by routing the same bullnose profile as on all the other pieces, see Fig. 22a.

FINISH. All that's left is to apply finish and mount the tray to the legs with special hardware, see Sources, page 31.

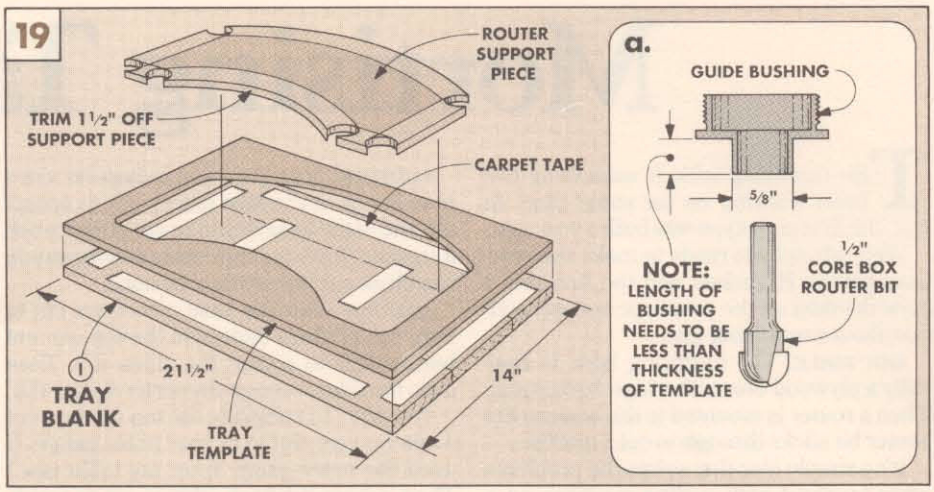

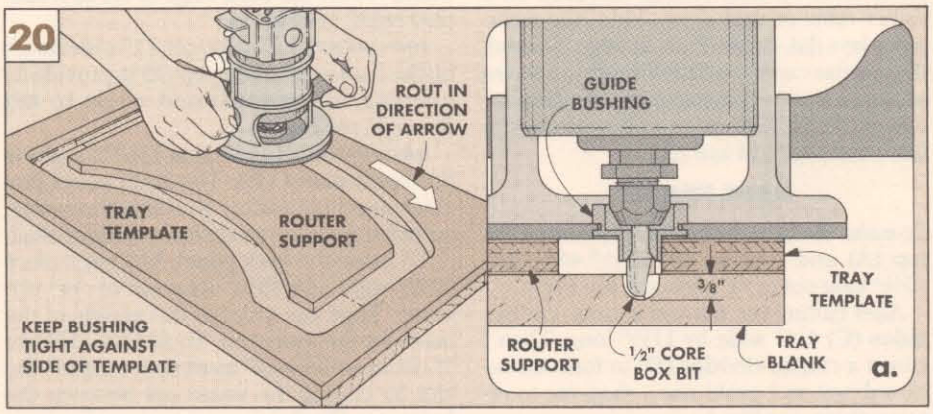

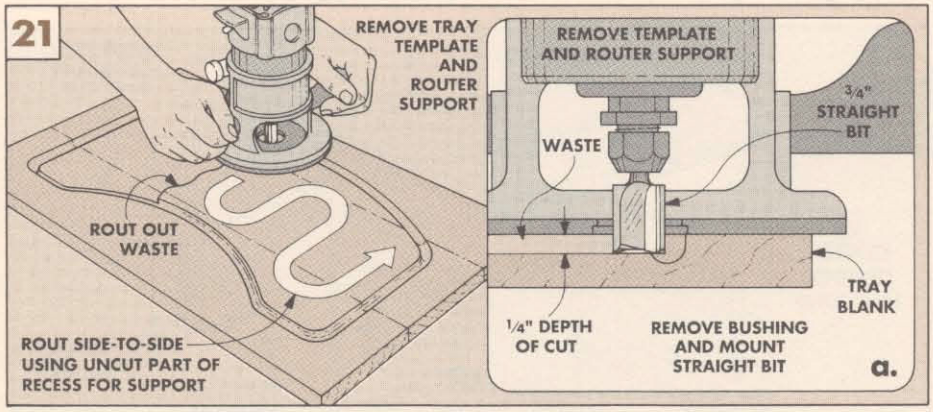

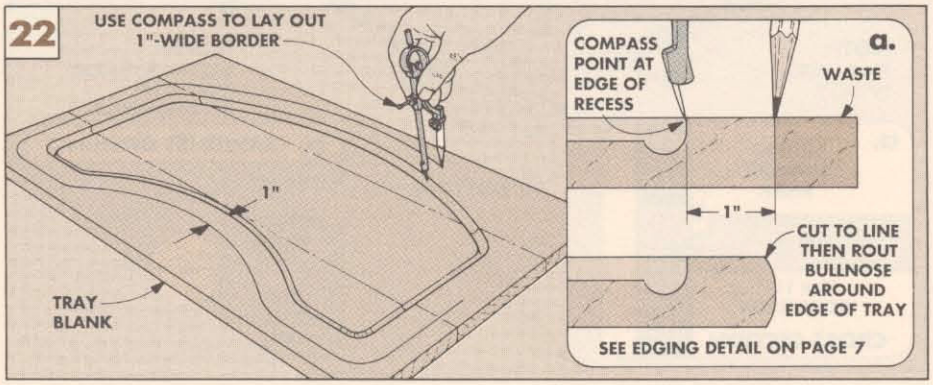

Mortising Table

This mortising table is something I've been working on for some time. In fact, the first prototype was built a year ago.

Well, when I got ready to make the mortises for the Highchair and the Armoire, I blew the dust off the prototype and got serious about a mortising table.

THE TABLE. The mortising table is basically a plywood box with a high back panel. Then a router is mounted to the back so the router bit sticks through to cut a mortise.

It's a simple idea that solves the problems often involved with cutting mortises on a router table or drill press. First, the workpiece lays flat, rather than on edge. Second, the mortise can be cut to full depth in a series of passes without having to change the position of the bit. (For more on how to use the table, see pages 14 and 15.)

BASE FRAME

To make the base frame, start by cutting the **top (A)** and **bottom (B)** 11½" wide and 15¾" long out of ¾" plywood, see Fig. 1.

After cutting the top and bottom, cut two **sides (C)** 4¼" wide by 11½" long. Then I added a **center divider (D)** to form an enclosed box so I could use a shop-vac to remove chips, see Fig. 1.

SHOP-VAC. If you're using a shop-vac, cut a hole in one of the side pieces (C) to accept the end of the hose. If you're *not* going to use a vacuum, leave out the center divider so you can clean out the sawdust by hand.

DADOES. After the base pieces are cut to size, cut ¼"-deep dadoes in the top (A) and bottom (B) to accept the sides (C). Then dado the sides to accept the center divider (D).

THE TOP. To complete the top (A) first cut a miter gauge slot to fit your miter gauge. (I used the miter gauge from my table saw.) Then, rabbet the back edge to act as a sawdust relief, see Fig. 1a.

TOP OPENING. Finally, cut a 1"-wide notch on the back edge of the top (A) to provide an opening for sawdust and chips to fall through, see Fig. 1b.

BACK PANEL. Now all that's left to make is the **back panel (E)**. The back panel provides a vertical surface to attach the router, and a fence for the workpiece to ride against.

To make the back panel, first cut a piece 10½" wide and 15¾" long out of ¾" plywood. Then cut a slot in the middle of the panel for the router bit. To do this, drill two 1"-diameter holes, 2" apart and complete the slot by cutting the waste out between the holes, see Fig. 2.

INSTALL THREADED INSERTS. With the slot completed, the next step is to install four ¼" I.D. threaded inserts in the back panel (E), see Fig. 2a. Two of these inserts are located on the front face for the guard adjustment knobs, and two are on the back face to allow the router to be adjusted up and down.

Note: It's important that the centers of the two holes on the back are exactly 9¾" apart. If they're not, the router plate won't fit.

ASSEMBLY. After the threaded inserts are installed, glue up all the pieces for the base frame. Then drill and countersink eight shank holes into the back panel (E) and screw it to the base, see Fig. 1.

ROUTER BASE PLATE

After completing the base frame, I made a new base plate for my router. This base plate provides a large surface to hold the router to the tall vertical back panel (E).

CUT TO SIZE. To make the **base plate (F)**, I started with a ¼"-thick piece of Masonite and cut it 7¾" wide and 11¾" long, see Fig. 3. (We're also offering a pre-cut Phenolic plastic base plate through *Woodsmith* Project Supplies, see page 31.)

After the base plate is cut to size, drill a 1¾"-dia. hole in the center for the router bit

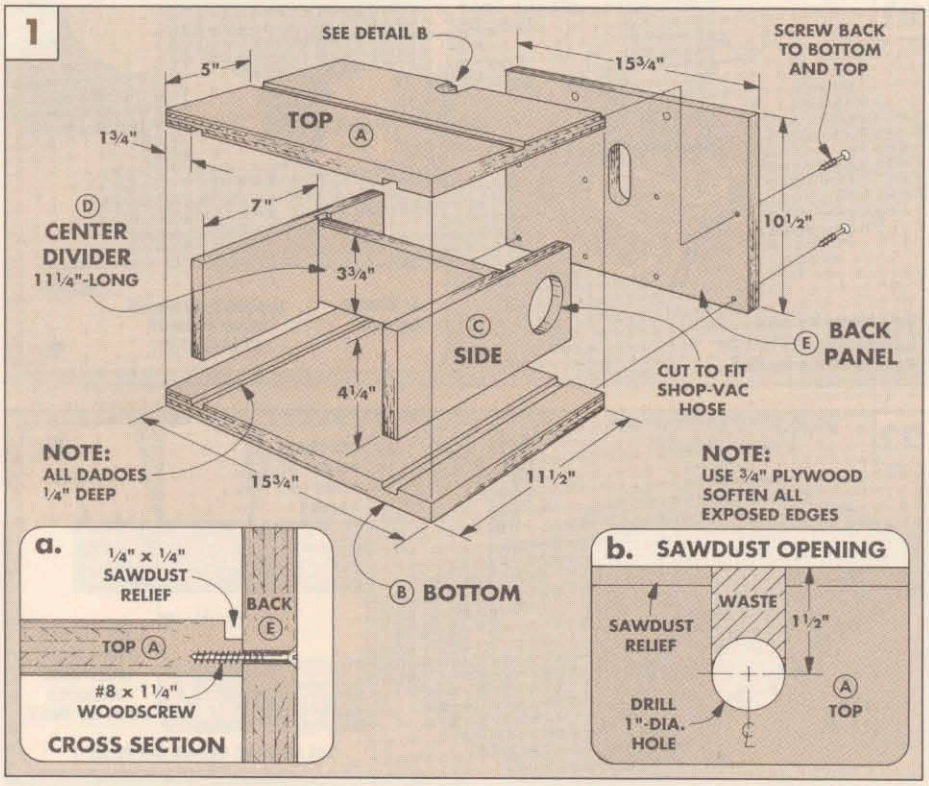

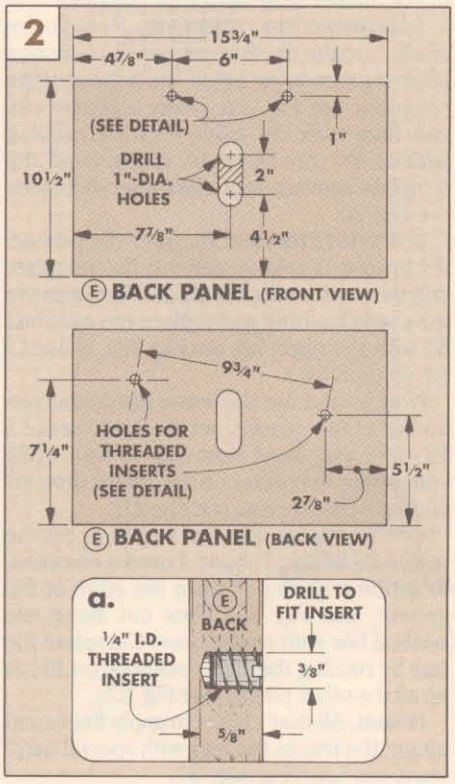

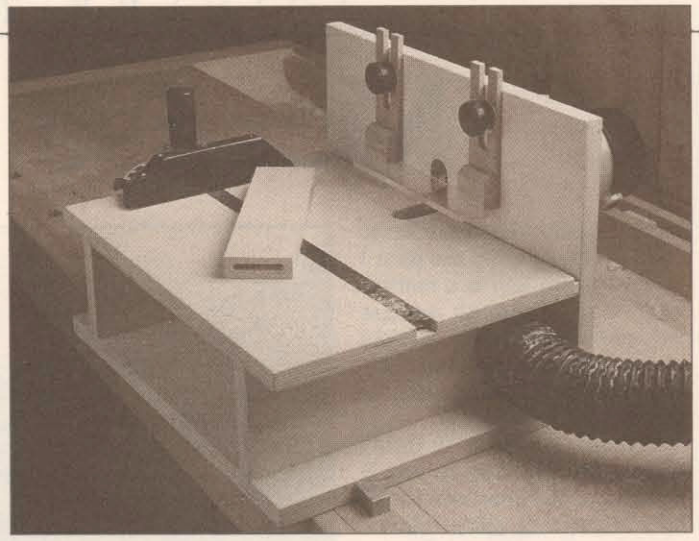

to fit through. (Shop Note: The hole doesn't have to be perfectly round, so if you don't have a hole saw or a large drill bit you can cut it with a sabre saw.)

Next, drill and countersink holes in this plate so you can attach it to your router. To lay out the holes, remove the plastic base from your router and use it as a template.

MOUNTING HOLE. To mount the plate to the vertical back panel, first drill a ¼"-dia. mounting hole 3" down and 1" in from the right side of the base plate, see Fig. 3.

ADJUSTMENT SLOT. After the mounting hole is drilled, cut a ⅜"-wide adjustment slot in the base plate, see Fig. 3. This slot provides a simple and accurate way to adjust the position of the router.

I cut this arched slot on a drill press by using the ¼" mounting hole as a pivot point, see Fig. 4. To do this, first drill a ¼"-dia. hole in a scrap piece of plywood and push a ¼" dowel in this hole. Then slip the mounting hole in the base plate (F) over the dowel.

Next, mount a ⅜"-dia. drill bit and position the plywood so the distance from the center of the dowel to the center of the bit is 9¾". Then clamp the scrap plywood piece to the drill press table.

Now drill a series of overlapping holes to create an arched slot, see Fig. 4. (Clean out the slot with a file.)

With the slot finished, I mounted the base plate (F) to the jig with two plastic knobs and washers, see Fig. 5.

Note: You could use ¾"-long hex head bolts and washers instead of the plastic knobs. See Sources on page 31 for more on the plastic knobs.

GUARD

All that remains to complete the jig is a guard. *Don't leave this guard off.* It protects your fingers, and is needed to align the begining and end of your cuts, see Fig. 7.

UPRIGHTS. To make the guard, cut two **uprights** (G) from ¼"-thick Masonite, and then cut a ½"-wide slot in each upright for the adjustment knobs, see Fig. 6. To attach the guard plate, glue a ½"-thick **block (H)** to the bottom end of each upright.

GUARD PLATE. Next, I cut a **guard plate (I)** from ¼"-thick Plexiglas to a size of 1½" wide by 7½" long. (Note: If you can't find ¼"-thick Plexiglas, you can glue together two pieces of ⅛"-thick Plexiglas.) Then I sanded a ½" radius on the two outside corners and lightly sanded the front edges.

To mount the Plexiglas to the uprights, drill countersunk holes on the bottom side of the plate and screw the plate to the blocks, see Fig. 6a.

REFERENCE LINES. When the guard is screwed together, position it over the top of the bit. Then use an X-acto knife to scribe two lines on the bottom of the plate to align with each side of the bit, see Fig. 7. By using the lines as a guide, I know exactly where I'm starting and stopping a cut.

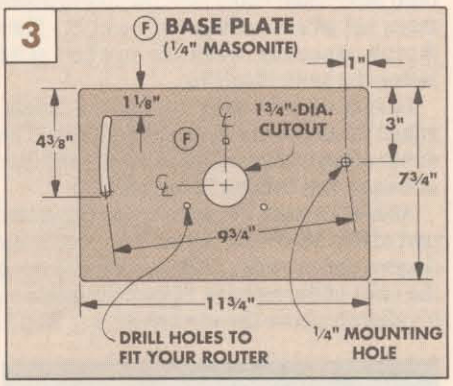

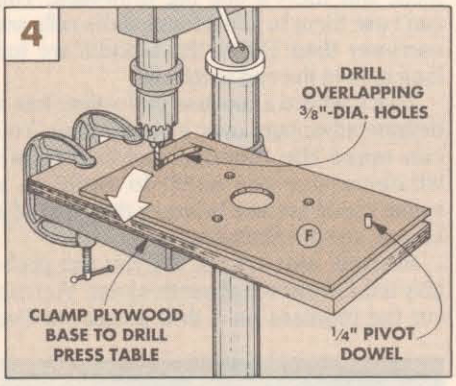

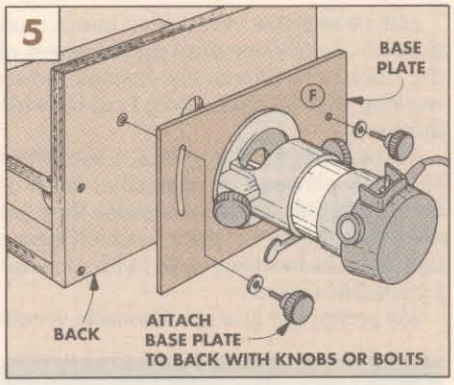

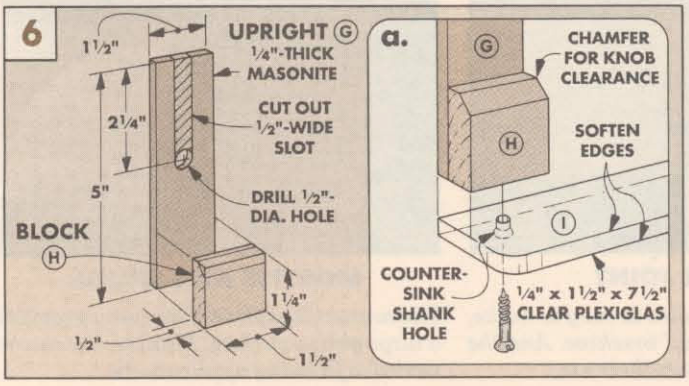

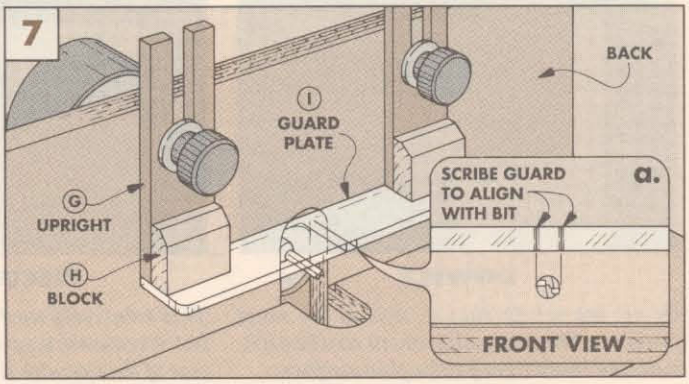

Mortise & Spline

Typically, when I have to build a frame, the joint I would choose first is a mortise and tenon. Although mortise and tenon joints *could* be used for the frames on both the Highchair and the Armoire shown in this issue — I didn't.

Instead, I used a "hybrid" joint, a mortise and *spline*. It consists of two mortises joined by a connecting piece called a spline, see drawing at right.

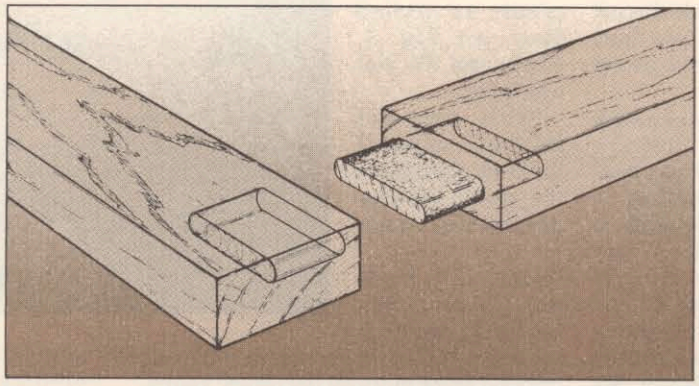

ADVANTAGES. There are a couple of advantages to using this joint instead of a mortise and tenon — especially on the two projects in this issue.

First, since the legs on the Highchair are angled, an angled tenon would be required. This is not only difficult to cut, but it's also difficult to fit.

Second, cutting a tenon on the end of a large piece like the arched top rail of the Armoire is not only awkward, it can be dangerous on a table saw.

QUESTIONS. Okay, once I decided to use a mortise and spline joint, there were some questions to ask. How large should the mortise be? And what's the best material to use for splines.

SIZE OF MORTISE. As a rule of thumb, mortises are usually one third the thickness of the stock to be joined. For example, when working with ¾"-thick stock, I cut ¼"-wide mortises.

SPLINES. As for the splines, I use either ¼"-thick plywood or Masonite. Both of these materials are ideal because they are *slightly* less than ¼"-thick — which means they fit in the mortises easily, with room for a good glue surface.

My preference is to use Masonite. It cuts a little cleaner than plywood and the edges are easier to round over, see Step 8 on the opposite page. (I use tempered Masonite — the kind that's smooth on both sides.)

DOWELS. Wouldn't it be easier to drill holes and use dowels?

I've never been very fond of dowels. First, it's difficult to drill holes in opposing pieces so they align *accurately*. And second, dowels don't provide as much glue surface as a spline, see photo below.

BISCUIT JOINERS. What about using one of the "new" biscuit joiners?

Biscuit joiners work great on some projects. But there's one big drawback. You can't use them to join a frame if the rails are narrower than 1¾"— the biscuits are too long to fit in the end of the rail.

That's where a mortise and spline has a definite advantage over a biscuit joint. You can make the mortise and the spline whatever size you need. In addition, a spline's glue surface is larger than that of a biscuit, see the photos below.

MORTISE AND SPLINE. As you can probably tell, I'm excited about this joint. You can cut the mortises on a drill press, but I've found it easier to cut them on the Mortising Table shown on pages 12 and 13. With this table I can cut clean, accurate mortises and add a spline — all in a fraction of the time it used to take to cut mortise and tenon joints.

THE BITS. The whole idea of the Mortising Table is to cut mortises with a router that's mounted horizontally. To do this you can use a regular straight bit (like a two-flute carbide-tipped straight bit). However, I would highly recommend using a spiral end mill bit. These bits are specifically designed to make plunge cuts and rout side-to-side much easier than straight bits. (For more information on these bits, see Talking Shop, page 30.)

STEP BY STEP

Once you have the Mortising Table and the bits, it's a simple matter to cut the mortises.

First, adjust the router so the bit is set to the correct height for the mortises you want to cut, see Step 2. One reason this joint can be made so quickly, is that the mortises align automatically. Just mark the face side of both pieces and make sure the marked side faces *up* when cutting both pieces. Then during assembly, keep the marked sides facing the same direction.

DEPTH OF CUT. After setting the height, adjust the depth of cut, see Step 2. Note: The depth of cut is affected by bit length and type of router, see Talking Shop, page 30.

ADJUST GUARD. The guard is an important part of this Mortising Table. It protects your fingers, and provides a reference for locating the ends of the mortise. Adjust the guard so it's slightly above the workpiece, see Step 3.

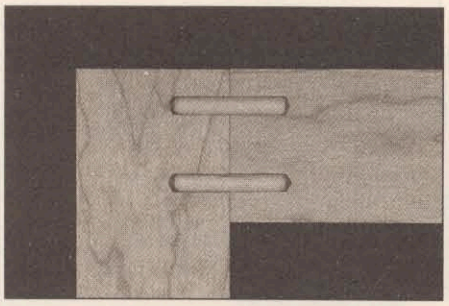

DOWELS

Of all the joints shown, this is the most familiar. However, alignment can be difficult and there's very little glue surface.

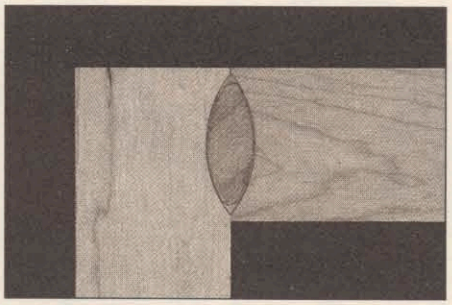

BISCUIT JOINT

This relatively new joint is easy to make, but it requires a special machine. And the size of the biscuits limits their use.

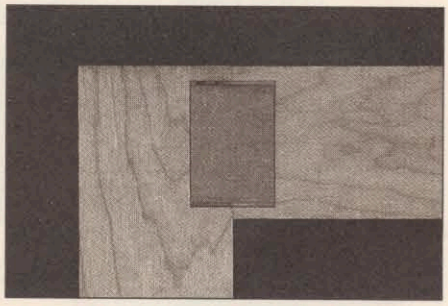

MORTISE AND SPLINE

The connecting spline of this joint provides a large gluing surface. Plus the size can be varied to fit many applications.

MARK MORTISE. The last step before routing is to use a square to mark the limits of the mortise across the joint line, see Step 4.

DIRECTION OF FEED. Before you start cutting mortises there are a few things to keep in mind. The first thing you have to be aware of is the direction of feed. Because the router is mounted horizontally, the stock must be fed from left to right. This is *opposite* the direction you feed on a router table.

This is a little awkward to get used to at first. It helped me to mount the Mortising Table at the *left* end of the bench, see Step 1. This way I worked in front of the table or on the left side, and I naturally fed left to right.

TWO TECHNIQUES. Basically, there are two techniques for cutting mortises on the Mortising Table — one for making mortises on the *end* of a piece, and another for mortising the *edge* of a piece.

END MORTISES. To cut *end* mortises, I use a miter gauge to support the workpiece, see Step 5. First, make full-depth plunge cuts to locate the ends of the mortise. To waste out the center, make several *shallow* passes, moving the workpiece from left to right into the bit, see Step 6.

EDGE MORTISES. To cut mortises on the *edge* of a workpiece, I make a series of shallow cuts (left to right) between the layout lines, pulling the piece away from the bit between each pass, see Step 7.

SPLINES. All that's left is to rip the material for the splines 1/8" narrower than the length of the mortise, see Step 8. Then cut the splines to length so they're 1/8" shorter than the combined depth of the mortises.

To glue up the joint, "butter" the inside of the mortises with a small artist's brush. Then, apply a *thin* film of glue to the spline. That's all there is to it, a strong, simple joint with a minimum of fuss.

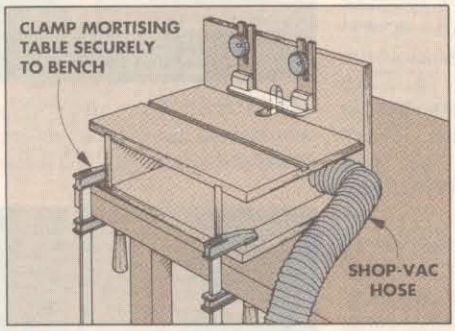

1 *To have access to the front and left (feed) side of the Mortising Table clamp it to the left corner of the bench. Insert shop-vac hose into hole cut in the side.*

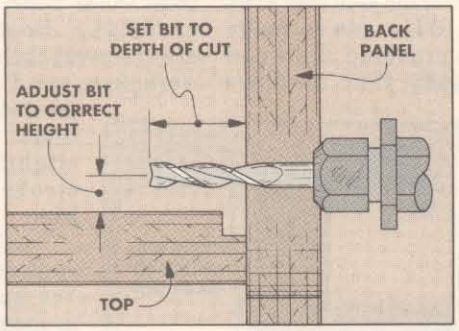

2 *Spiral end mill bits work best. Adjust the bit to produce the depth of cut you want. Then, adjust the router up or down until the bit is at the correct height.*

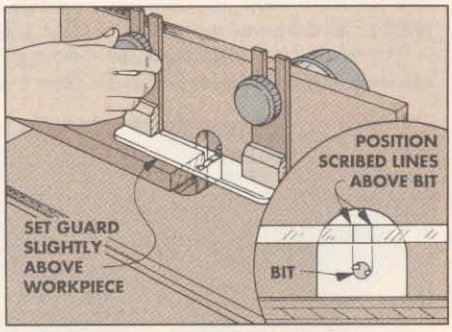

3 *Tighten down the Plexiglas guard plate so it's slightly above the workpiece, and so the scribed lines in the plate are directly above the router bit.*

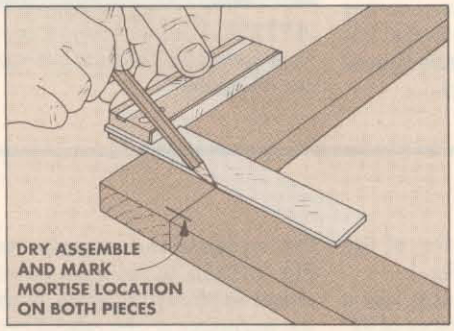

4 *To mark the limits of both mortises, hold the pieces in their final position (at a right angle to each other), and draw lines across both faces.*

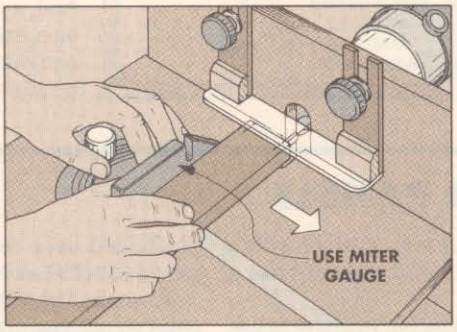

5 *Guide workpiece with miter gauge. (If end of workpiece is angled, angle miter gauge.) Then make two full-depth plunge cuts to define ends of mortise.*

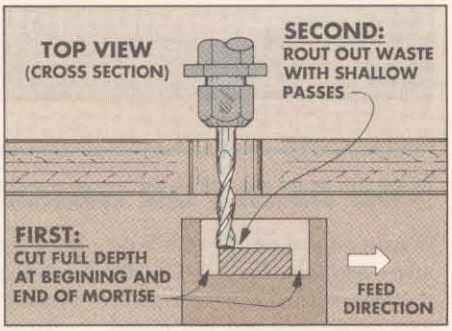

6 *To complete the mortise, make several shallow cuts while moving the workpiece from left to right, and pulling the workpiece away between passes.*

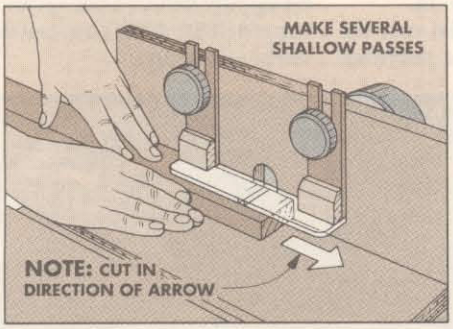

7 *When cutting a mortise on the edge of a board, make shallow cuts, working from left to right. Use marks on guard to start and stop on the layout lines.*

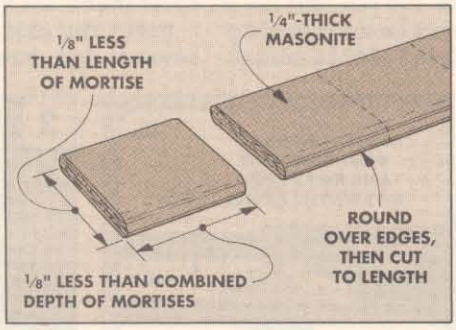

8 *Cut spline material into strips 1/8" narrower than length of mortise. Round over edges. Cut splines to length 1/8" less than combined depth of mortises.*

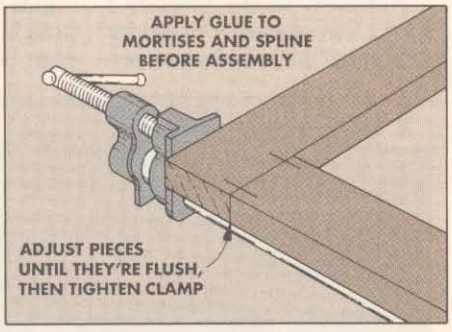

9 *Finally, apply glue into both mortises and on the spline. Before clamping in place make sure the edges and faces of the adjoining pieces are flush.*

Shop Notes

BURNISHING A MITER

■ As I was building the Armoire, I ran into a problem at one corner of the base — the miter joint had a slight gap in it.

Should I start over and cut new pieces to make it perfect? Or is there an easy way to fix it?

There's a neat little trick for closing outside miters that's used on base moldings in houses. You just "burnish" the corners to close the gap.

When the gap on an outside miter is 1/16" or less you can roll both sides of the joint over to fill the gap. What you're really doing is crushing the wood fibers slightly. Once the fibers are pushed together, they usually stay that way.

BURNISHING. To burnish the miter on the base, I used a screwdriver. (A nail set with a tapered point works better on intricate moldings.) Hold the screwdriver at a very slight angle to the workpiece, see Fig. 1a. Then press down hard to bend the fibers slightly as you stroke down the joint.

Won't this leave a rounded corner? Yes, but that's okay in most situations. Mitered corners usually end up slightly rounded after they're sanded. And, a sharp corner on a base is the first part that gets dinged up anyway.

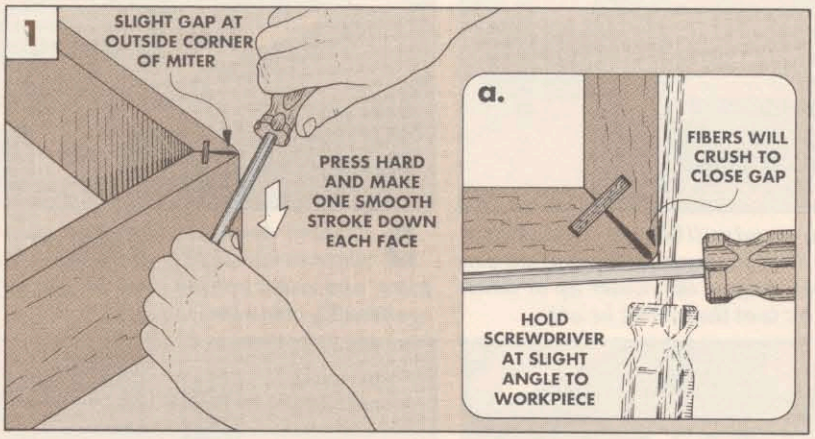

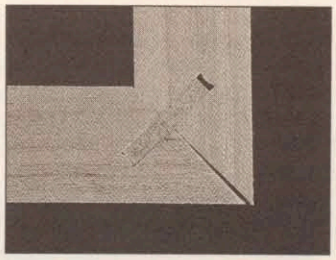

BEFORE: After assembly, sometimes there's a slight gap at the outside corner of a miter.

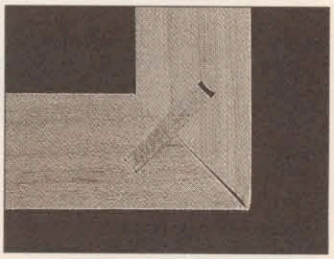

AFTER: To close the gap, burnish both faces to slightly crush the fibers together.

RUB ARM FOR RAISED PANELS

■ How do you cut the profile on an *arched* raised panel? Usually it's done with shaper cutters or expensive ($75 and up) raised panel router bits. These bits have bearings that follow the shape of the arch to maintain a consistent width on the bevel.

However, on the Armoire I tried a less expensive bit (under $25) to cut the raised panel, see page 31. It cuts a bevel with a shoulder, but it doesn't have a bearing.

To use this bit, you have to use a fence or a rub arm. For the straight sections of the panels, I used the router table fence, refer to Fig. 25, page 25.

RUB ARM. But you can't use a straight fence for the arched top edge. So here I added a rub arm positioned over the top of the raised panel bit, see Fig. 1.

To make the rub arm, cut a point on one end of a piece of 1/4" plywood or Masonite. Then screw this arm to a cleat. Now clamp the cleat to your router table fence so the arm sits just above the bit, see Fig. 1a.

USING THE ARM. To rout the beveled edge, draw a reference line on top of the rub arm, see Fig. 1. Then, to maintain a consistent width on the profile, move the workpiece so the edge is perpendicular to that line, see Fig. 2.

Cut the raised panel profile in a series of passes, moving the point of the arm away from the bit slightly between passes until you reach the width you want for the beveled edge.

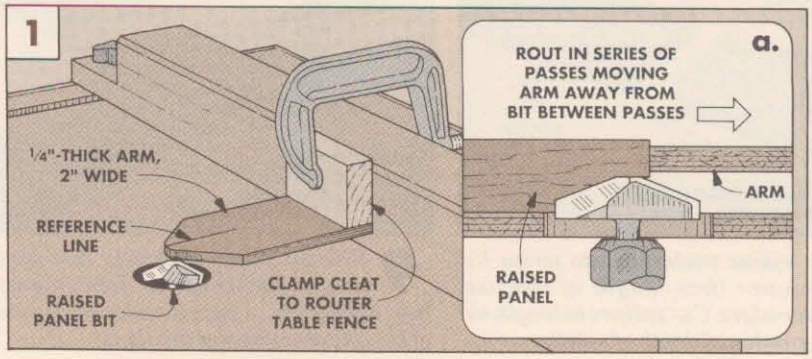

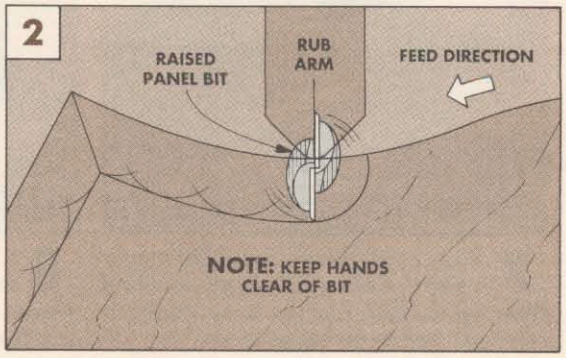

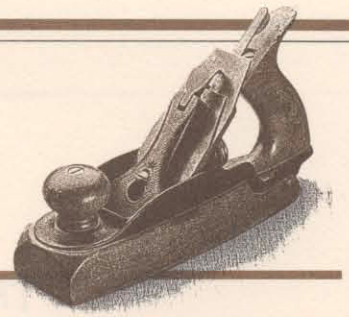

FLOATING PANELS

■ When assembling a solid wood panel into a frame, the panel must be free to expand and contract with seasonal changes in humidity. That's why you shouldn't glue a solid wood panel into the grooves of a frame.

Okay, but if the panel is free to move around, what keeps it centered in the frame? The weight of the panel will pull it down, and if it's loose, it can shift to the right or left.

PIN IN PLACE. One solution is to turn the frame over and pin the panel with brads, see Fig. 1.

Before nailing, check that the panel is centered in the frame. After the panel is centered, drive a *single* brad centered at the top and bottom of each panel. The brad should go through the tongue and into the rail, see Fig. 1a. By using one brad the panel can expand/contract in both directions from the center.

FOAM TAPE. A second method is to use foam rubber in the slots, see Fig. 2. Putting foam on all four sides keeps the panel centered, and when the panel expands, the foam compresses.

I've found foam weatherstripping tape with an adhesive back works great. It's available at hardware stores in ¼" widths (perfect for the ¼" slots). Build up layers in the slots until the panel is snug within the frame, see Fig. 2a.

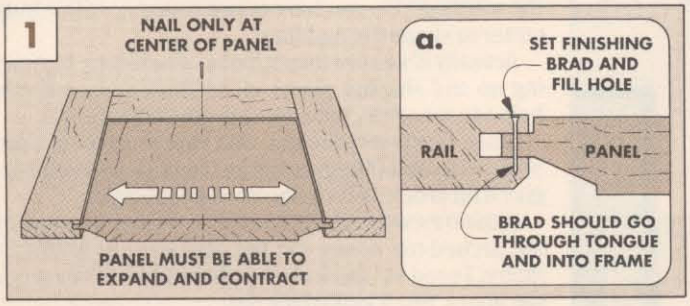

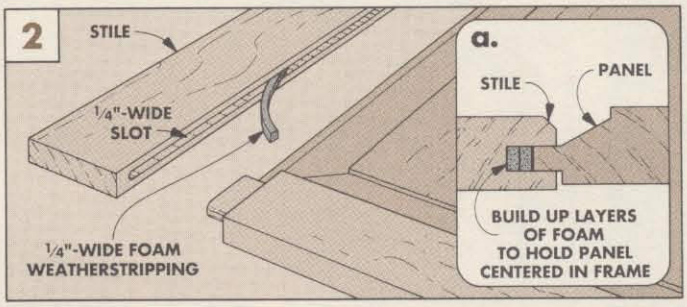

WORKING WITH WARP

■ I'm often asked where I find perfectly straight, flat wood for use in projects. The answer is simple — I don't. Since wood comes from trees and trees contain water, all wood will have a tendency to warp as it takes on or lets out moisture.

The trick is being aware of the warp and using it so it doesn't seriously effect the appearance or function of the project.

ARMOIRE DOORS. Slightly warped pieces can work to your advantage. Take, for example, the tall doors on the Armoire (shown on page 18).

When I built the Armoire I selected all the wood for the doors first. Go through the wood pile and select enough reasonably flat, straight-grained wood and set it aside for the doors. (Note: To allow the moisture in the wood to reach a balance with your shop's environment, store the wood on edge with some space between the pieces.)

DOOR STILES. When it's time to select the wood for the door *stiles* (especially the inside stiles, parts AA), sight down the length of each piece and look for any bow (warp). There's sure to be a little bit over 5½ feet.

Now, position the stile so the high point of the bow will face *out* (away from the cabinet), see Fig. 1. Then, when the door is closed, the top and bottom will touch the cabinet facing first. To pull the bowed center of the door in tight, I located the door catch on the cabinet near the center of the door's height.

CLAMPING WARP. Another example where I use a warped board to my advantage is when clamping down face frames to a cabinet. Sometimes it's difficult to position a clamp so there will be pressure in the center of a long facing piece. In this situation face the board so the bow faces *in*, see Fig. 2. Then, when you clamp the ends down tight, the center will be tight as well.

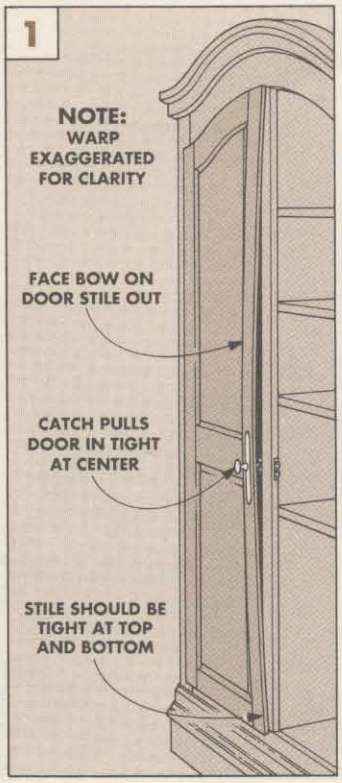

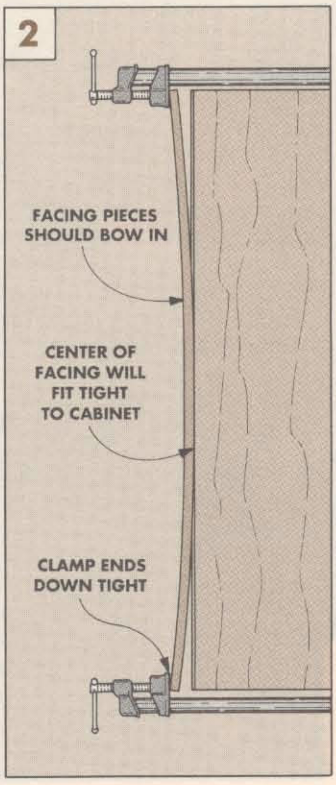

Armoire

The graceful arched top and the raised-panel doors of this cherry armoire make it a classic. It's sure to become a family heirloom to be handed down from generation to generation.

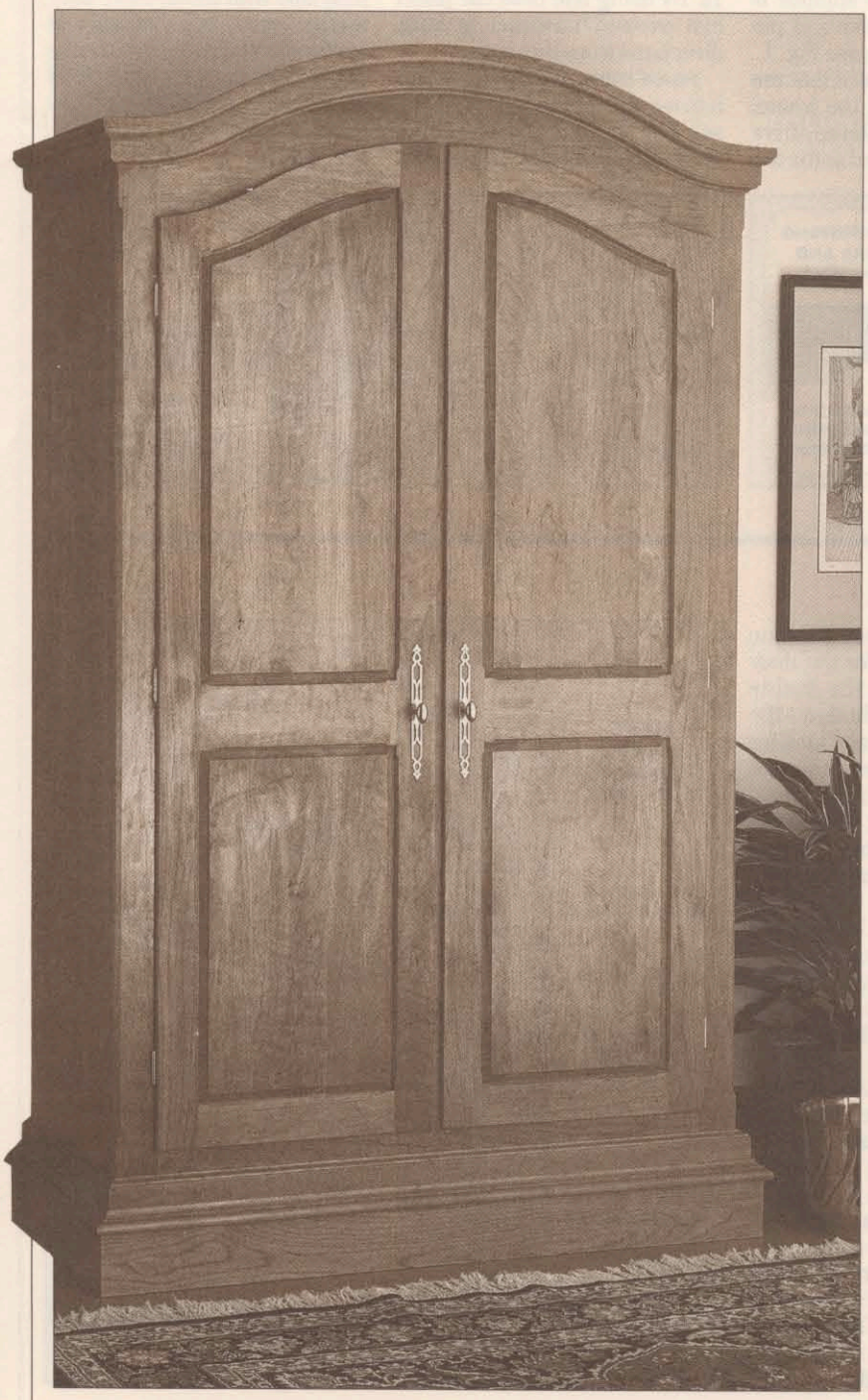

This cherry armoire is one of the largest projects we've ever featured in *Woodsmith*. But it's not the size, it's the details that really make it interesting.

ARCHED TOP. The most striking feature is the arched crown molding on the top of the cabinet — a detail that looks very difficult to build. Do you have to hand-carve the molding? Do you have to use a shaper with a huge cutter to shape the molding?

Actually it's easier than it looks. It's all done by building up and shaping pieces of ¾"-thick stock with the help of a template, a router, and two common bits.

Since this is a technique that can be used on other projects as well (like grandfather clocks), we decided to give it an article of its own, see pages 26 to 29.

RAISED PANELS. The other big challenge was making the arched-top doors. On the first version of this armoire, I used ¼"-thick cherry plywood for the panels in the doors. But it looked too flat.

What I really wanted was the traditional look of raised panels made from solid stock — a lot more work, but those panels sure make the doors look great.

Okay, but how do you cut the bevel on the curved top section of the top panel? The solution, again, was simple. It involves an inexpensive panel-raising bit and a simple set-up on a router table. (This technique is explained in Shop Notes on page 16.)

DETAILS. As with any project this size, there are lots of details to work out. And it would be easy to be intimidated by all this work. But by conquering one detail at a time, this armoire turned out to be a good challenge and a lot of fun.

WOOD. One last thing I'd like to mention. To build the armoire shown here, I used a combination of solid cherry and cherry plywood. There's a lot of it. My total bill for the plywood and solid stock was about $450.

SUPPLIES

LUMBER

- 2½ Sheets ¾"-thick cherry plywood
- 1 Sheet ¼"-thick cherry plywood
- 59.5 Board feet ¾"-thick solid cherry

HARDWARE AND FINISH

(See page 31 for information about hardware kit.)

- (3) Pair ⅜" brass offset hinges
- (2) Brass knobs with decorative brass back plates
- (2) Brass adjustable ball door catches
- Shelf supports (4 per shelf)
- (2 Quarts) Tung oil

EXPLODED VIEW

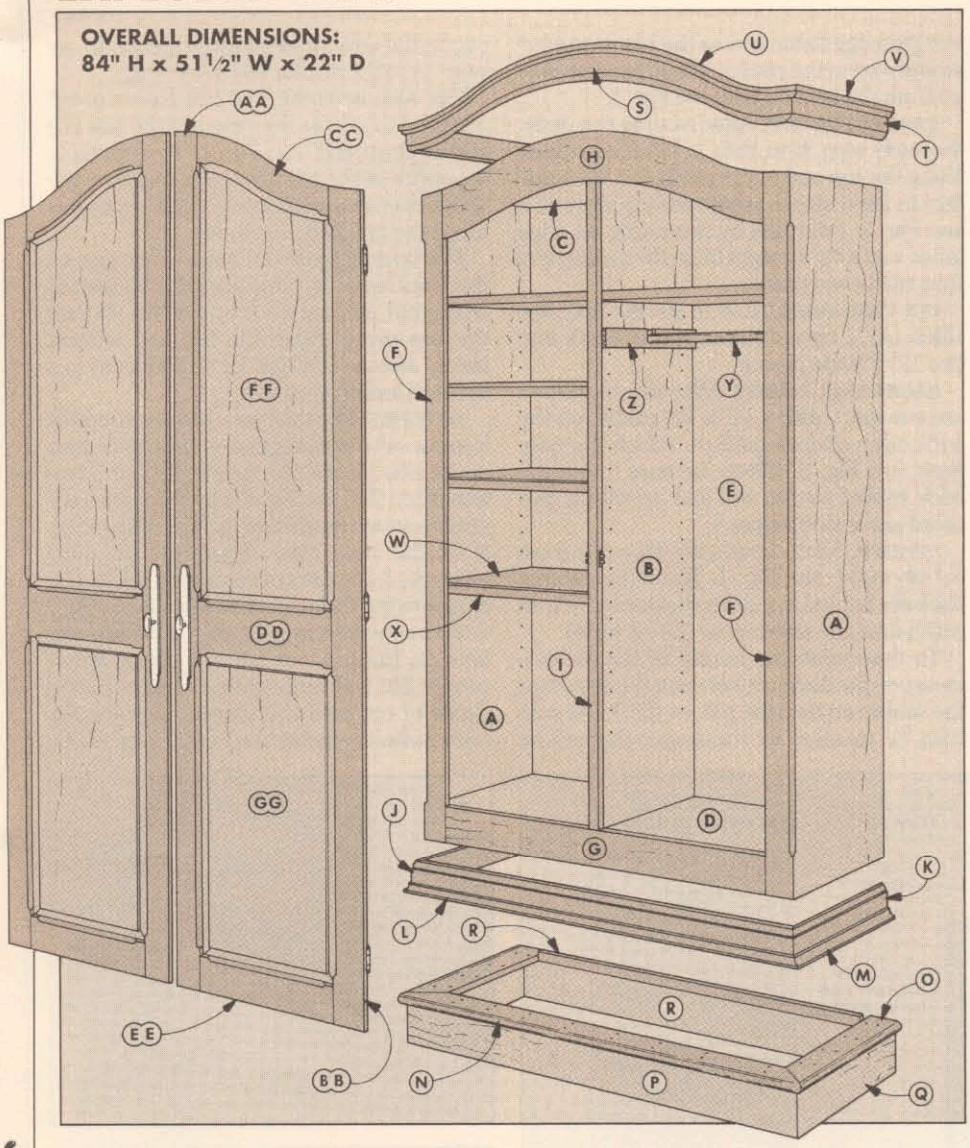

MATERIALS

CASE

A	Sides (2)	¾ ply x 19½ - 73
B	Divider (1)	¾ ply x 19¼ - 67¾
C	Top (1)	¾ ply x 46½ - 19
D	Bottom (1)	¾ ply x 46½ - 19¼
E	Back (1)	¼ ply x 47 - 73
F	Stiles (2)	¾ x 3 - 74 rgh.
G	Bottom Rail (1)	¾ x 4½ - 41½
H	Arched Top Rail (1)	¾ x 13½ rgh - 41½
I	Divider Cap (1)	¾ x 1¼ - 69 rgh.
J	Ogee Frt. Mold. (1)	¾ x 2⅝ - 49
K	Ogee Side Mold. (2)	¾ x 2⅝ - 20¾
L	Cove Frt. Mold. (1)	⅝ x ⅝ - 50¼
M	Cove Side Mold.(2)	⅝ x ⅝ - 21⅜

BASE

N	Bullnose Front (1)	¾ x 2¾ - 51½
O	Bullnose Sides (2)	¾ x 2¾ - 22
P	Kickboard Fr./Bk.(2)	¾ x 4¼ - 50½
Q	Kickboard Sides (2)	¾ x 4¼ - 21½
R	Back Filler Strip (1)	¾ x 1¼ - 46

CROWN MOLDING

S	Base (Front) (1)	¾ x 3¼ - 51½ rgh.
T	Base (Sides) (2)	¾ x 3¼ - 22 rgh.
U	Trim (Front) (1)	¾ x 1¼ - 51½ rgh.
V	Trim (Sides) (2)	¾ x 1¼ - 22 rgh.

SHELVES AND ROD

W	Shelves (7)	¾ ply x 18½ - 22½
X	Shelf Edging (7)	¾ ply x 1 - 22½
Y	Clothes Rod (1)	1" dowel x 22⅛
Z	Rod Supports (2)	¾ x 2 - 19

DOORS

AA	Inside Stiles (2)	¾ x 3 - 68⅛
BB	Outside Stiles (2)	¾ x 3 - 64 rgh.
CC	Top (Arch) Rails (2)	¾ x 3 - 14⅝
DD	Middle Rails (2)	¾ x 4½ - 14⅝
EE	Bottom Rails (2)	¾ x 3 - 14⅝
FF	Top Panels (2)	¾ x 15¼ - 36 rgh.
GG	Bottom Panels (2)	¾ x 15¼ - 24⅜

CUTTING DIAGRAM

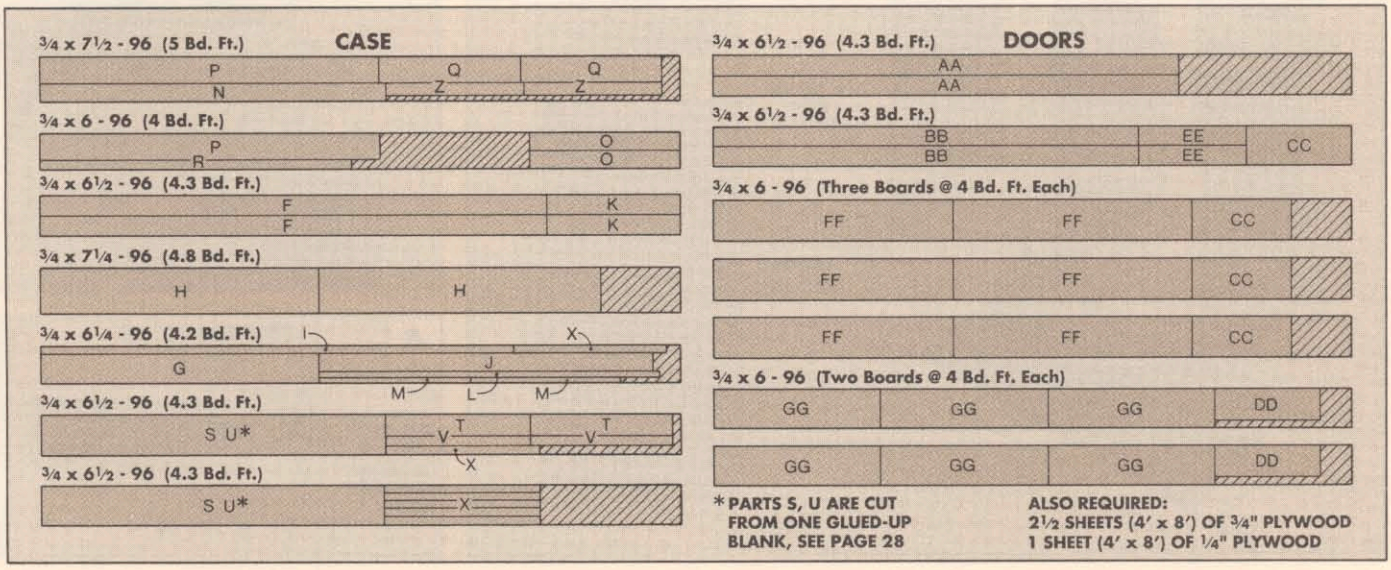

*** PARTS S, U ARE CUT FROM ONE GLUED-UP BLANK, SEE PAGE 28**

ALSO REQUIRED:
2½ SHEETS (4' x 8') OF ¾" PLYWOOD
1 SHEET (4' x 8') OF ¼" PLYWOOD

CASE

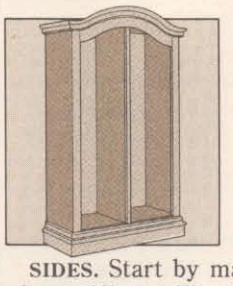

I began building the armoire by cutting the parts for the case from ¾" plywood. Plywood is stable and not as likely to warp as solid stock so it's a good choice for the large pieces.

SIDES. Start by making the two **side pieces (A)**, see Fig. 1. Although the sides are just two pieces of ¾" plywood, each side has a dado to accept the bottom (D) and a rabbet to accept the top (C) of the cabinet—and these dadoes and rabbets must be perfectly aligned. The trick is to rout one dado and one rabbet across a wide blank of plywood. Then cut the blank in half to get two identical side pieces.

To make the sides (A), first cut a large blank to a finished length of 73" and rough width of 41", see the Plywood Cutting Diagram in Fig. 1.

DADO FOR BOTTOM. After cutting the blank to a finished length, I routed a dado across the blank to accept the bottom piece (D), see Fig. 2. To rout the dado, clamp a straightedge fence across the blank so a ¼" straight bit in the router will be postioned 4" up from the bottom end, see Fig. 1.

RABBET FOR TOP. After routing the dado, the next step is to rout a ¼"-deep rabbet along the top end of the blank (on the same face as the dado) to accept the top piece (C), see Fig. 3. I did this by mounting an edge guide and a ½" straight bit in the router, and then made two passes.

CUT CASE SIDES. Now, to get the two case sides (A), I ripped the plywood blank into two 19½"-wide pieces.

BACK PANEL RABBET. After the side pieces are cut apart, rout a ¼" x ½" rabbet on the *back* edge of each piece to attach the case back, see Fig. 3. (Note: Be sure to cut the back rabbet so you will end up with a mirrored set of side pieces.)

DIVIDER. Next, I cut a **divider (B)** from ¾" plywood, see Fig. 1. Since the cabinet back fits behind it, cut the divider ¼" *less* in width than the side pieces (19¼" wide).

To determine the length of the divider, measure the distance between the dado and the rabbet on the side pieces (68") and subtract ¼" (to allow for the tongue that will be cut on the ends of the bottom piece). In my case, I cut the divider (B) 67¾" long.

TOP AND BOTTOM. The last pieces of ¾" plywood to cut for the case are the **top (C)** and **bottom (D)**, see Fig. 1. To determine the width of the top piece (C), measure the side pieces and subtract ½". In my case this made the top piece 19" wide.

The bottom piece (D) has a ¼" tongue on the front edge to later accept a hardwood facing rail, so I cut it ¼" wider (19¼") than the top piece. After the top and bottom pieces are cut to width, cut both pieces to a uniform length of 46½".

TONGUES. The final step before assembly is to cut ¼"-thick tongues on the front edges of the side pieces (A), divider (B), and bottom piece (D), see Fig. 4. These tongues are used to attach hardwood facing, refer to Fig. 6. At the same time, I also cut identical tongues on the *ends* of the bottom piece (D) to fit into the dadoes in the side pieces (A).

To make the tongues, rout ¼"-wide rabbets on the top and bottom edges with a router bit and edge guide. Increase the depth of cut until the tongue between the rabbets fits the dadoes in the side pieces (A).

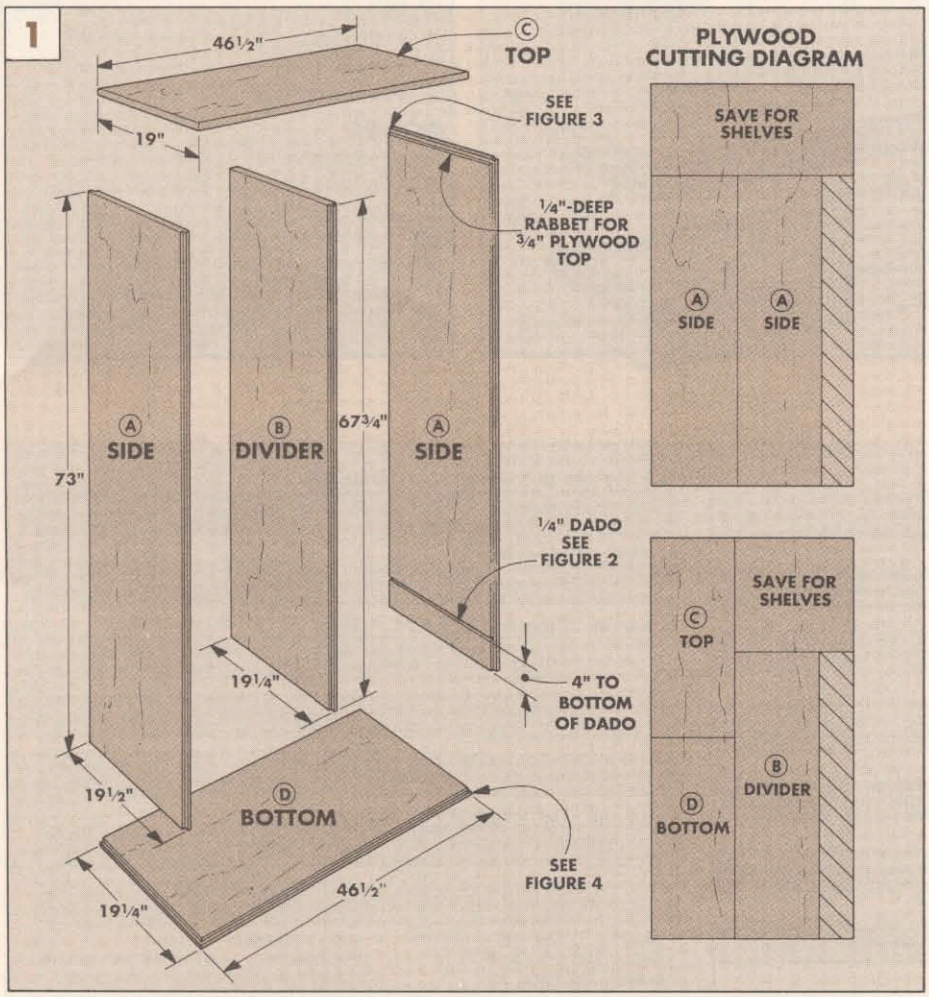

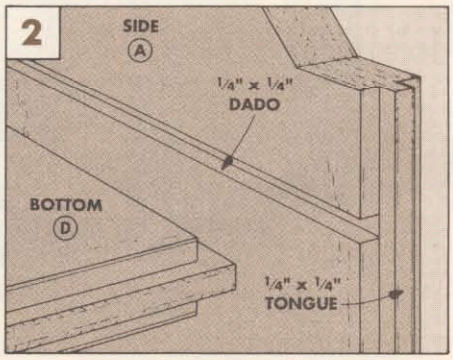

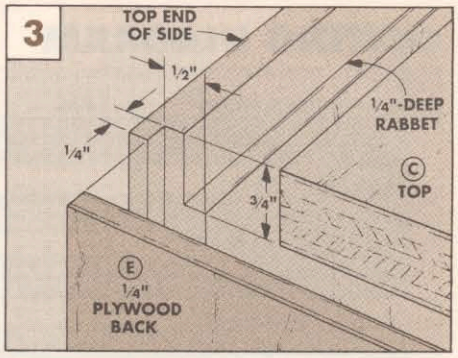

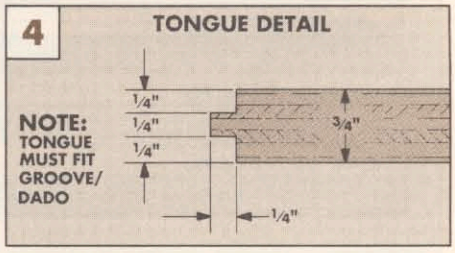

CASE ASSEMBLY

After all the tongues are formed, the case can be assembled, see Fig. 5. Start by standing the divider (B) on its front edge (with the tongue facing down) and screwing it between the top (C) and the bottom (D).

Next, add the side pieces (A). Glue the tongue on the bottom (D) into the dado in the sides (A), see Fig. 5a. Then screw the side pieces into the top (C). (These screws will be covered later by a molding strip.)

BACK PANEL. To square up the case, I cut a plywood **back (E)** to fit between the rabbets and flush with the top and bottom ends of the side pieces, and screwed it in place.

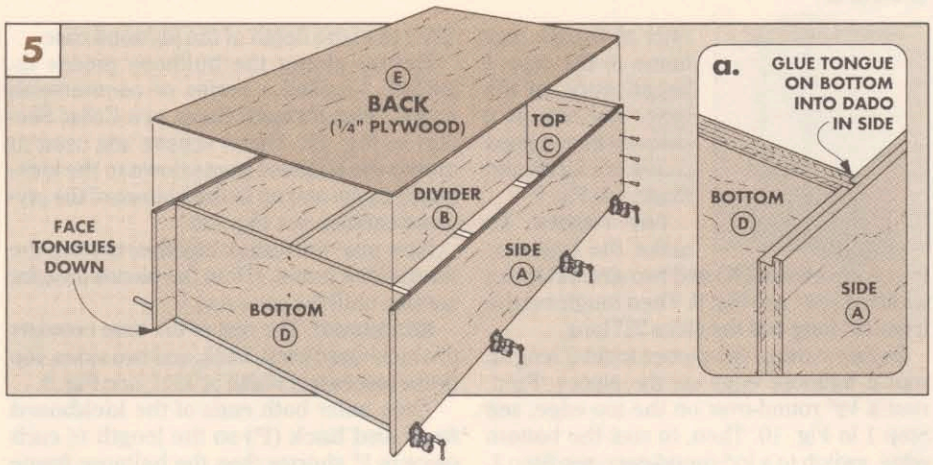

FACE FRAME

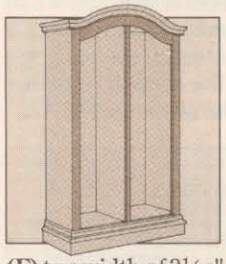

Now that the basic plywood case is assembled, the front edges can be trimmed with 3/4"-thick hardwood face frame pieces.

STILES. Start by cutting two **stiles (F)** to a width of 3 1/16" and 1" *longer* than the side pieces (74"). (Note: After assembly, the stiles are trimmed flush with the side of the case and to length to follow the arch at the top, see Fig. 8a.)

Next, cut a groove on the inside face of each stile to fit over the tongue on the side pieces (A), see Fig. 7. Position the tongue 5/16" from the *outside* edge of the stile. (This leaves a 1/16" overhang for trimming.)

After cutting the grooves, I routed a 1/4"-wide mortise centered on the *inside* edge of each stile at the top, see Fig. 8. This mortise will accept a spline to join the stile to the end of the arched top rail (H). (Note: I cut the mortises with the Mortising Table shown on pages 12 to 15.)

Before you can glue the stiles in place, there's one more little step. To make room for the stiles, you have to trim back 2 1/4" of the tongue on the front of the bottom piece (D), see Fig. 6.

BOTTOM RAIL. With the stiles glued in place, measure the distance between them to determine the length of the **bottom rail (G)**. Then cut the bottom rail to this length and 4 9/16" wide. (It's trimmed to 4 1/2" later.)

Next, cut a groove to fit over the tongue on the bottom piece (D). (This looks just like the stile, see Fig. 7.) Then glue the bottom rail in place.

TOP RAIL. The most difficult piece to make is the **arched top rail (H)**. It's cut from a 13 1/2"-wide edge-glued blank. Since the steps are fairly complex, it's all in a special article on pages 26 to 27.

After the arched top rail was cut to shape, I routed mortises on both ends to match the ones in the stiles. Then brush glue into all the mortises and fit the top rail between the stiles. Finally, slide splines into the mortises from the open top end, see Figs. 6 and 8.

Once the glue dries, extend the curve from the top rail onto the stiles with a pencil, and then cut it with a sabre saw, see Fig. 8a.

DIVIDER CAP. The last facing piece is the **divider cap (I)**. It's cut to a width of 1 1/4" and to length to fit tight between the top and bottom rails. Then cut a groove on the inside face of the cap to fit over the tongue on the divider (B), see Fig. 7.

TRIM FACING FLUSH. After the divider cap is glued in place, you can trim the stiles (F) flush with the *outside* of the side pieces (A) and the bottom rail (G) flush with the *top* of the bottom piece (D). To do this I used a router and flush trim bit. (Note: On the top of the bottom rail, the router bit won't cut square all the way into the inside corners. So I had to clean these up with a chisel.)

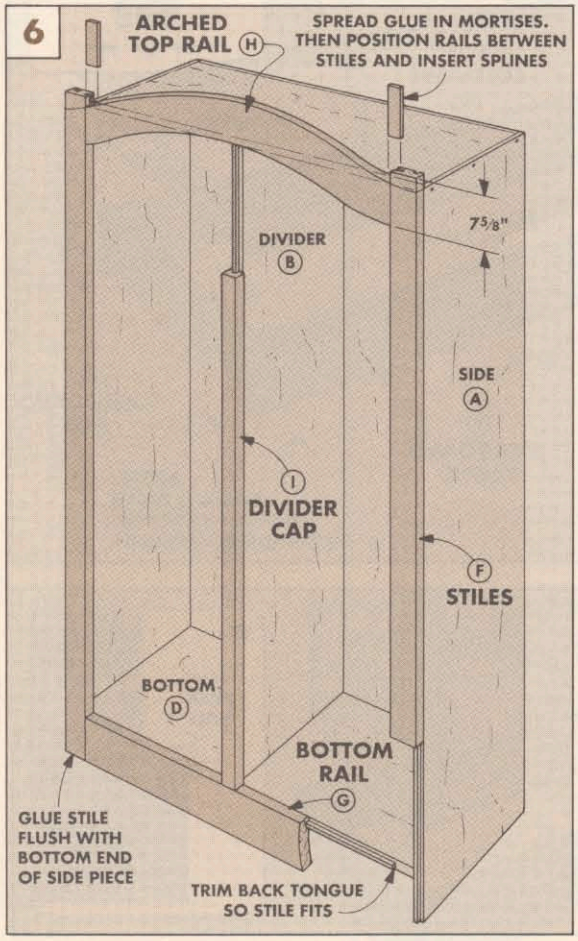

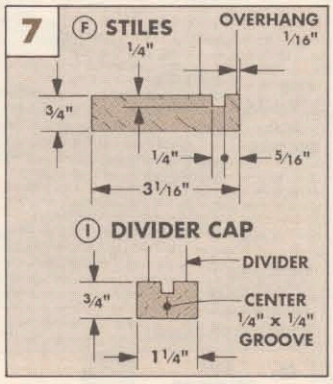

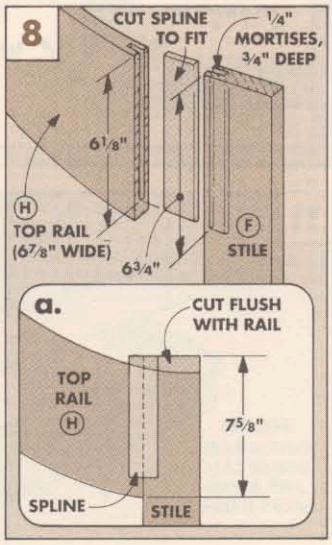

BASE

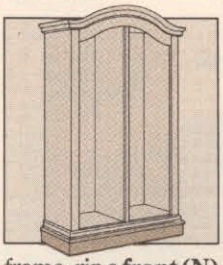

After adding the face frame to the case, I began work on the base. The base is a bullnose frame glued on top of a kickboard frame, see Fig. 9.

TOP FRAME. To make the bullnose frame, rip a **front (N)** and two **sides (O)** to a width of 2¾", see Fig. 9. Then rough cut the front 53" long and the sides 23" long.

Before cutting the pieces to final length, rout a bullnose edge on the pieces. First, rout a ½" round-over on the top edge, see Step 1 in Fig. 10. Then, to rout the bottom edge, switch to a ¼" round-over, see Step 2.

After the pieces are routed, miter both ends of the front piece (N) 4" longer (51½") than the width of the plywood case. Then miter the front end of each side piece (O) and cut the back end square so it's 2" longer (22") than the depth of the plywood case.

Before gluing the bullnose pieces together, I drilled a series of countersunk screw holes through them, see Cross Section in Fig. 10. These screws are used to mount the bullnose frame down to the kickboard frame and up to the bottom of the plywood cabinet, see Fig. 11a.

Now glue the miters together to form the three-sided frame. (Hold the pieces on a flat surface until the glue sets.)

KICKBOARD. The rest of the base consists of a kickboard front, back, and two sides. Rip these pieces to a width of 4¼", see Fig. 9.

Then miter both ends of the **kickboard front and back (P)** so the length of each piece is 1" shorter than the bullnose frame (50½"). Next, miter both ends of each **kickboard side (Q)** so the length is ½" shorter than the bullnose frame sides (21½").

KERF AND SPLINE. To help keep the miters aligned, cut a kerf in each miter, see Fig. 9a. Then cut a spline to fit the kerfs.

BASE ASSEMBLY. After the joints are cut, glue the kickboard frame together. Then drill pilot holes for the screws and glue and screw the bullnose frame to the top of the kickboard frame, see Fig. 9.

FILLER STRIP. One final step on the base is to cut a **filler strip (R)** to fit on top of the kickboard back, see Fig. 9b. Before gluing the filler strip in place, cut a rabbet along the top edge of the strip to accept the cabinet back, refer to Fig. 12.

BASE TO CASE. After the base is complete, it can be attached to the case, see Fig. 11. To do this, I laid the case down on its back.

Now center the base on the case and align both sections flush across the back, see Fig. 12. When they're in position, drill pilot holes through the shank holes in the bullnose frame and into the bottom of the case, see Fig. 11a. Then screw the sections together and the back to the filler strip, see Fig. 12.

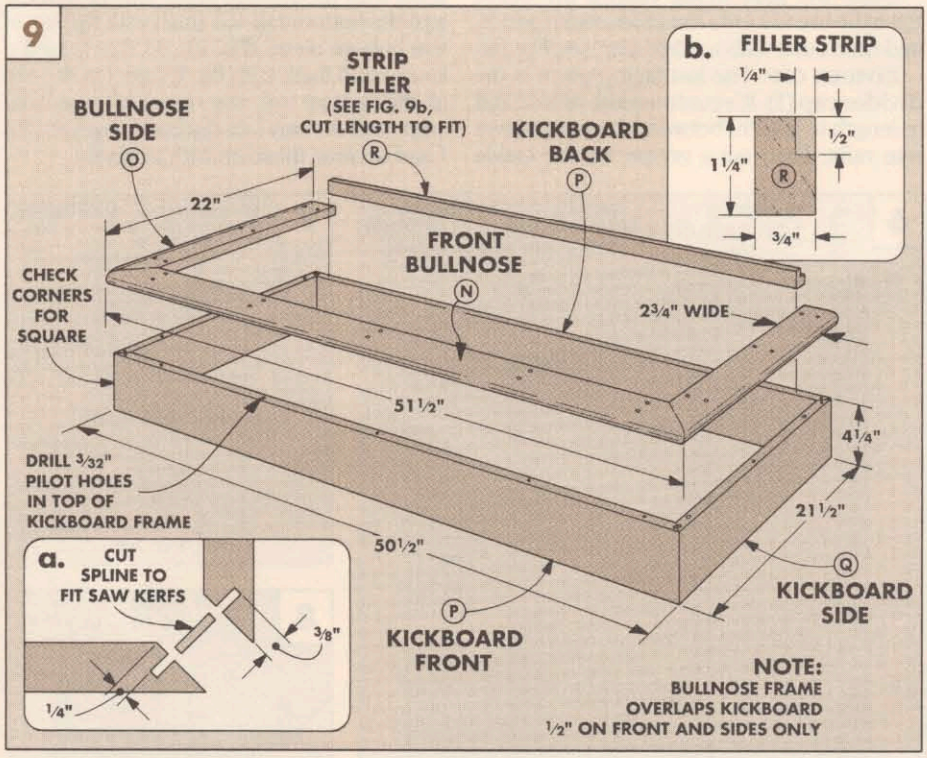

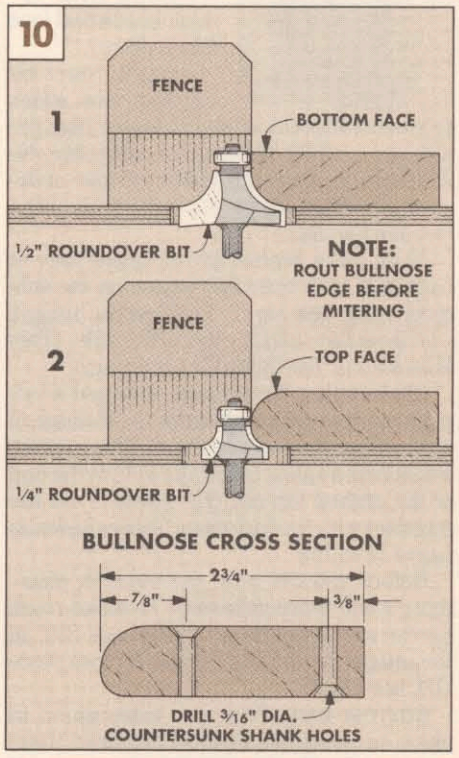

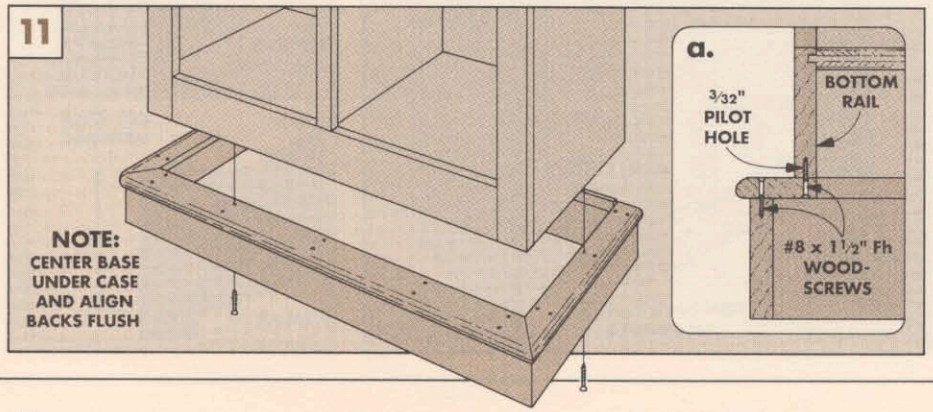

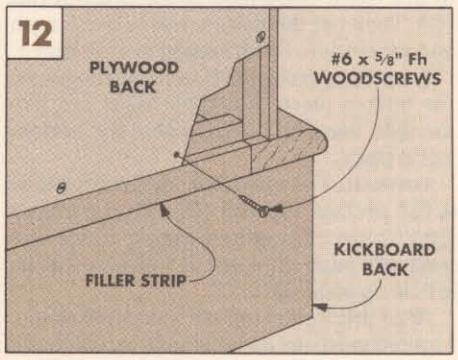

MOLDING

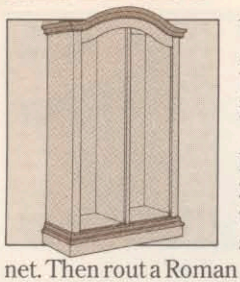

While the case was still laying on its back, I added molding around the base.

OGEE MOLDING. First, I cut enough 2⅝"-wide molding to fit around the front and sides of the cabinet. Then rout a Roman ogee on the top edge of each piece. Miter a **front piece (J)** to fit across the front of the cabinet and screw it in place from behind, see Fig. 13d.

Now, miter the front ends of the **side pieces (K)**, and then cut off the back ends flush with the back of the case. Screw these pieces in place as well, see Fig. 13.

COVE MOLDING. Next, I added **cove molding (L,M)** in front of the ogee molding. To make these strips, rout a ½" cove on the edges of a 1½"-wide strip of ⅝"-thick stock. Then trim the ⅝"-wide molding off the outside edges. Now miter the molding to fit around the case and glue the strips in place.

CROWN MOLDING. After gluing the molding around the base, I started work on the crown molding at the top. The crown molding is made from two pieces of ¾"-thick stock laminated together.

The front arch strips **(base piece S and trim piece U)** are both cut from a 12"-wide blank. (For more on this, see pages 28 and 29.) After mitering the arched front molding to fit the cabinet, I screwed it to the front of the top rail (H), see Fig. 13a.

The straight **side molding strips (T,V)** have the same profiles as the arched front strips. After the pieces are glued together, miter the front ends and cut the back end off square with the back of the cabinet, see Fig. 13. Then screw the side moldings to the side of the cabinet from the inside, see Fig. 13b.

CHAMFER. There's one more little detail on the case. I routed ⅜" stopped chamfers on the front corners of the cabinet starting and stopping about 3" from the crown molding at the top and the ogee molding at the base, see Figs. 13 and 13c.

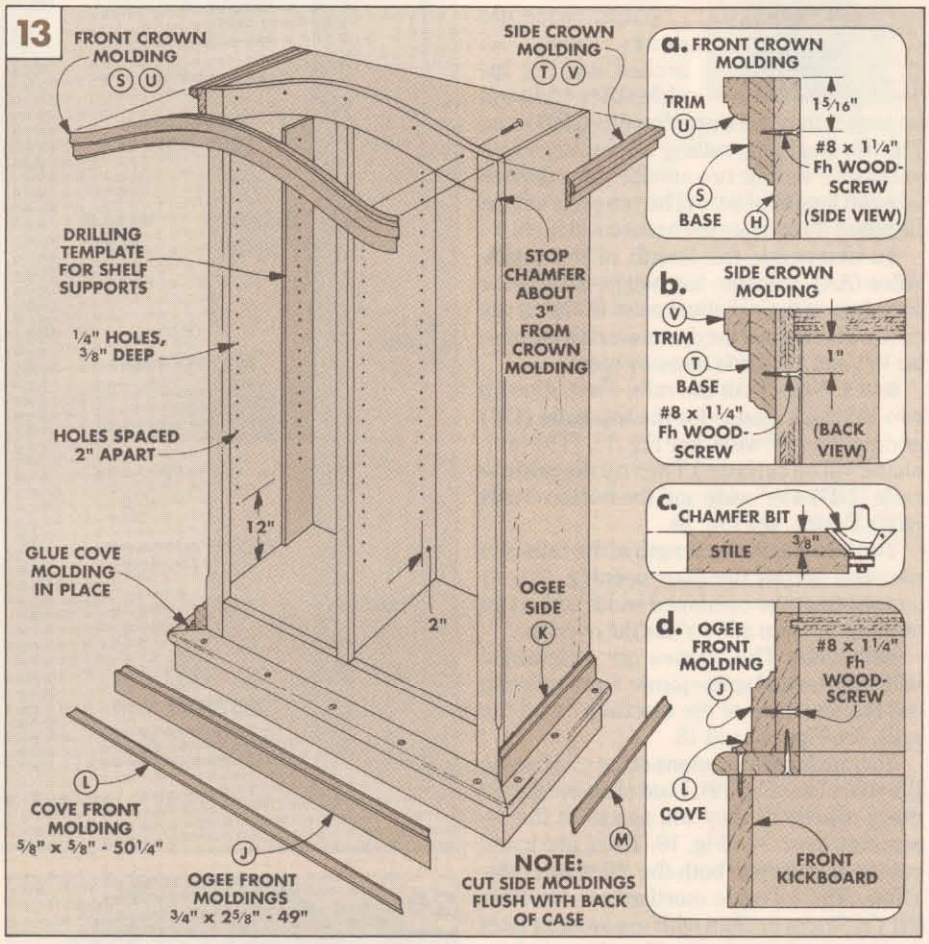

SHELVES

After all the moldings were attached, I made the ¾" **plywood shelves (W)**, see Fig. 14.

CUT TO SIZE. To determine the size of the shelves, measure the inside of the case. To allow for edging, I cut the shelves to width ½" less than the depth of my case. Then cut the shelves ⅛" less than the distance between the divider and the cabinet side.

TONGUES. After cutting the shelves to size, the next step is to rout tongues on the front for the edging strips, see Fig. 14. (For more on edging plywood, see *Woodsmith* No. 62.)

EDGING. Now cut the 1"-wide **shelf edging (X)** from ¾"-thick stock. Next cut off-center grooves in each strip to fit over the tongues on the shelves. And then glue the edging in place.

SUPPORT HOLES. To hold the shelves, I used brass pin supports. Drill ¼" holes for pin supports in the cabinet sides (A) and the divider (B). To position the holes, I cut a drilling template to fit between the bottom and top of the cabinet as shown in Fig. 13.

CLOTHES ROD. If you want to use the armoire to hang clothes, you will have to add a **clothes rod (Y)**, see Fig. 15. I supported the rod with two **rod supports (Z)**. The supports in turn are held in place with two pins that fit into the shelf support holes.

Cut the supports from ¾"-thick stock 2" wide and 19" long. Next, drill 1" holes, *only ½" deep* centered on each piece. Then rout an "escape" area for the rod to be removed above one of the holes, see Fig. 15a.

Now drill holes and mount ¼" dowel pins on the back side of each support to align with the holes in the cabinet. Finally, fit the supports into the cabinet and cut a 1"-dia. dowel to length so it wedges between the supports.

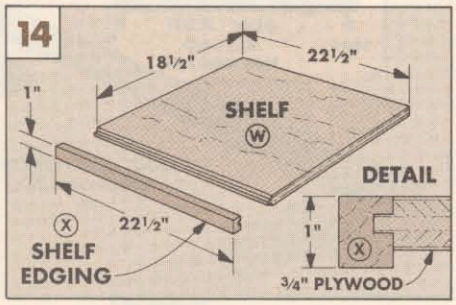

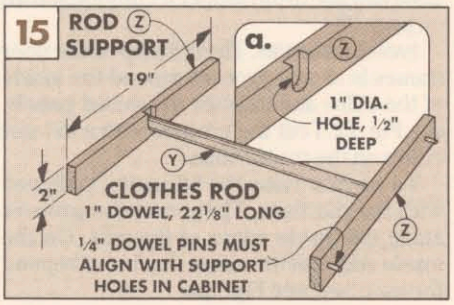

DOOR FRAMES

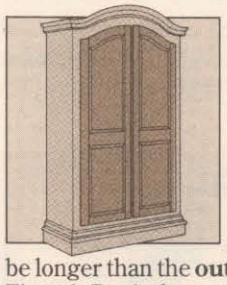

The last step in building the armoire is to make and install the doors. I started with the frames.

STILES. Since the doors have an arched top, the **inside stiles (AA)** will be longer than the **outside stiles (BB)**, see Fig. 16. Begin by cutting all the stiles to a width of 3" and the two outside stiles (BB) to a rough length of 64". (The top ends will be trimmed down after the arched rail is cut.)

To determine the length of the inside stiles (AA), measure the height of the door openings at their highest point (67⅝" in my case). Then, since the doors overlap the case by ¼", add ½ to this measurement.

RAILS. Next, I cut the rails. First, glue-up two ¾"-thick blanks for the **top rails (CC)** and rip them 9" wide, see Fig. 17. (The arch shape will be cut later.) Then rip the **middle rails (DD)** 4½" wide and the **bottom rails (EE)** 3" wide, see Fig. 18.

The formula for the length of the rails is to measure across the door opening (20⅛") and subtract the combined width of the two stiles (6"). Then add ½" for the overlap.

MORTISES. The frames are assembled with mortise and spline joints. Start by laying out the locations of the mortises on all the rails, see Figs. 17 and 18.

To transfer the locations of the mortises to the stiles (see Fig. 19), I laid all of the pieces down exactly as they will appear in the assembled door, see Fig. 16. Then, mark and cut the mortises in both the stiles and rails. (Note: The ¼"-wide mortises are offset on the thickness to align with grooves cut later for the raised panels, see Figs. 17 and 18.)

Now, cut splines to fit the mortises and dry assemble the door frames.

CUTTING THE ARCH. The next step is to cut the top door rails (CC) to their arched shape. To lay out this shape, I made a template by tracing the arched door opening onto a piece of cardboard, see Fig. 20. Then cut the template to shape and transfer it to the top door rail (CC) and outside stile (BB), see Fig. 21.

After cutting the top edge of the rails and top end of the outside stiles to shape, cut the bottom edge of the arched rails using the band saw and drum sander technique shown on page 28.

PANEL GROOVES. The last step on the door frames is to rout grooves around the inside of the stiles and rails for the raised panels, see Fig. 22. I cut the grooves with a ¼" slot cutter on the router table.

To do this, raise the bit until it's aligned with the mortises. Then, rout the grooves along the inside edges of the rails. On the inside edges of the stiles, don't rout beyond the mortises, see Fig. 22a.

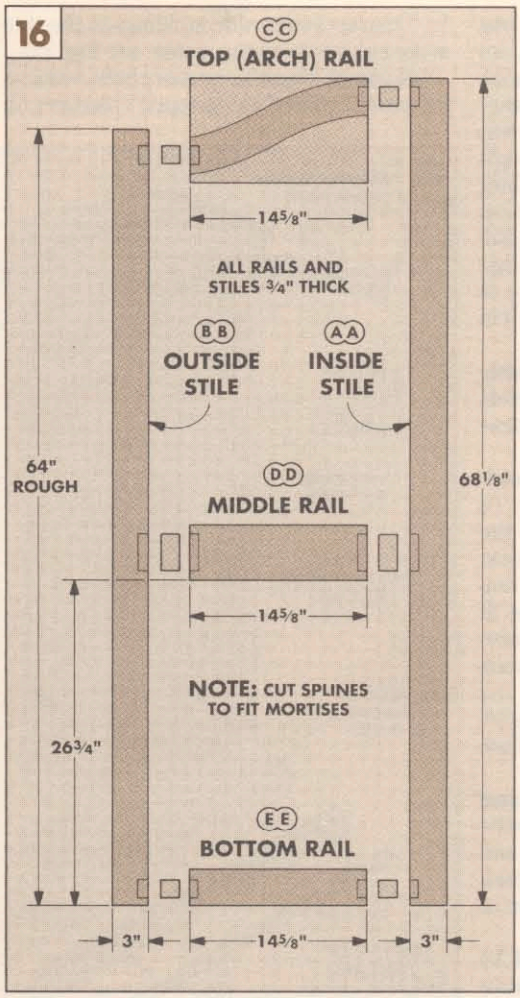

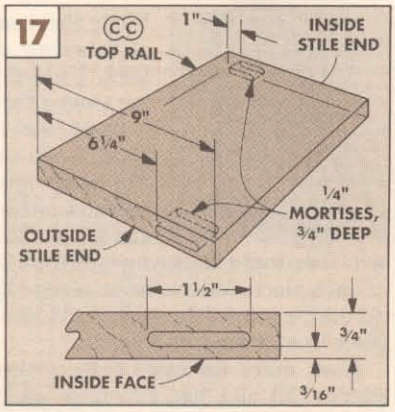

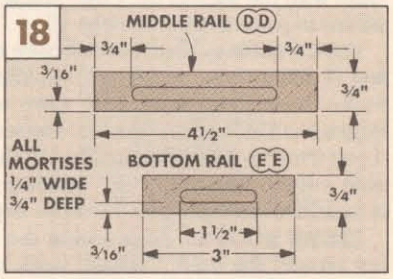

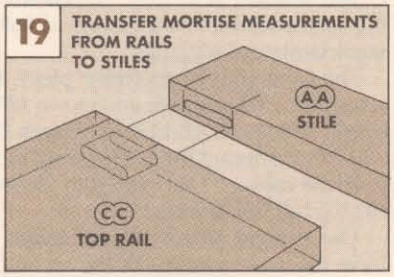

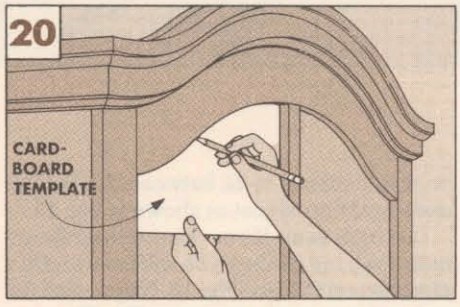

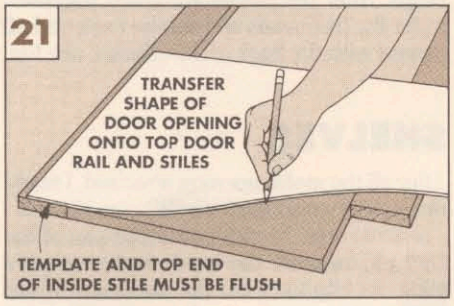

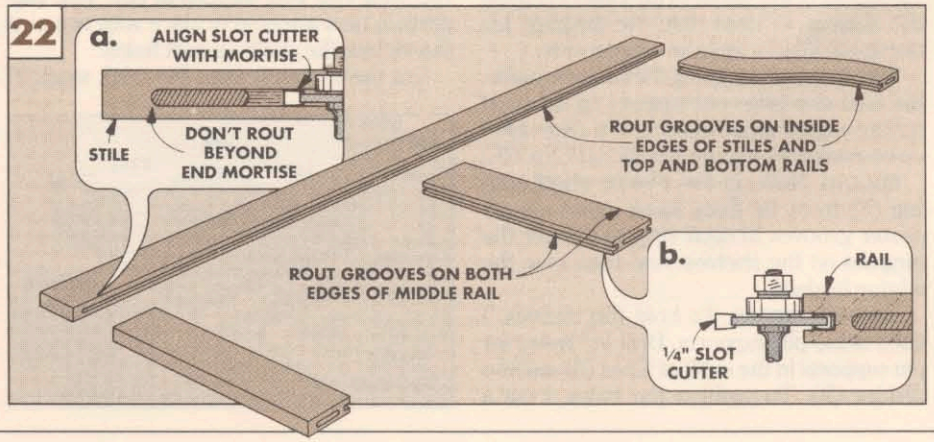

DOOR PANELS

After the grooves were routed in the frame pieces, I dry assembled the frames so I could rout stopped chamfers around the inside of the frames and take the measurements for the panels, see Fig. 26.

CHAMFERS. To rout the chamfers, mount a chamfering bit in the router and lower it 3/16" below the base, see Fig. 24a. Then, if you place a 3/4"-wide block in each corner, the bearing will hit the block and stop the chamfer 5/8" from the inside corner.

PANELS. After routing the chamfers, work can begin on the raised panels. Start by edge-gluing enough 3/4"-thick stock to make two **top panel (FF)** blanks roughly 16" x 36". Then glue up the **bottom panel (GG)** blanks to a rough size of 16" x 26".

CUT TO SIZE. To determine the finished size of the panels, measure the openings in the frames and add 5/8" to the height and width. This allows for a 5/16"-long tongue on the panels to fit into the grooves, see Fig. 27.

After you know the size of the panels, cut the bottom panels to size. But the arched top panels (FF), take a little more work.

First, cut the panel to width (5/8" more than the opening). Now center the panel on the width of the opening and trace the arch onto the panel. Then cut along the curved line.

To determine where to cut the bottom edge, measure the height of the opening at the highest point. Then transfer this measurement to the panel and add 5/8".

RAISING THE PANELS. After the panels are cut to size, the next step is to rout the raised panel profile on the front face of each panel. Since I used a raised panel bit without a bearing on the router table, I had to use the router table fence to guide the edge of the panel. (Note: To rout the arched section, I clamped a rub arm on the fence, see page 16.)

Start by raising the bit 3/8" above the table, see Fig. 25. Then, rout the profile in a series of passes so it's 1" wide, see Steps 1 and 2.

RABBET. Next, turn the panels over and rout a rabbet in the back, see Step 3 in Fig. 25. Make the cut in a series of passes sneaking up on the height until the tongue just fits in the 1/4" slot in the door frame.

Note: The panel is cut to fit only 5/16" into the slot, but a 3/8" rabbet is cut on the back. This leaves a 1/16" gap so the panel can expand with changes in humidity.

FINISH PANELS. Before assembling the door, it's a good idea to finish the panels. If you don't, and the panels shrink, the unfinished tongue could be exposed.

ASSEMBLY. Now the doors can be assembled. Glue up the mortise and spline joints, but don't put any glue on the panels or in the slots. (The panel has to be able to expand and contract, see page 17.)

ROUND-OVER AND RABBET. There are two more steps on the doors. Round over the front edges with a 1/8" round-over bit, see Step 1 in Fig. 26a. Then rout a 3/8"-deep rabbet in the back edges, see Step 2.

FINISH AND HARDWARE. The only thing that's left is to finish the cabinet. Then mount the doors with offset hinges, see Figs. 23 and 27. Finally, screw the catches and knobs in place, see the Exploded View on page 19.

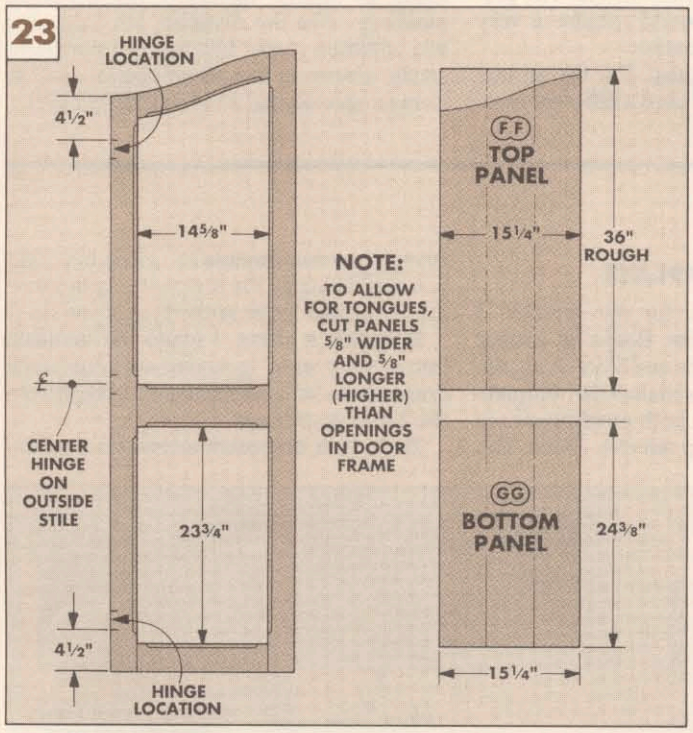

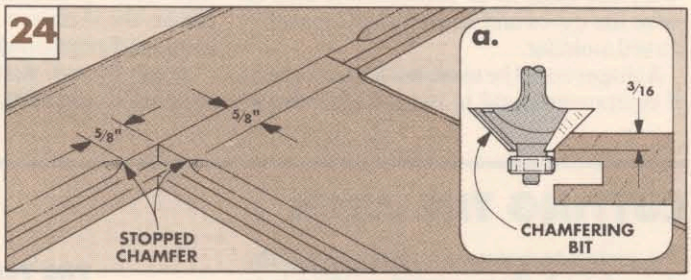

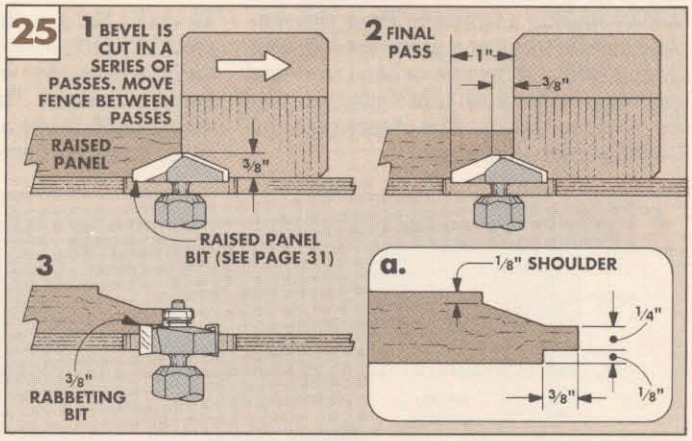

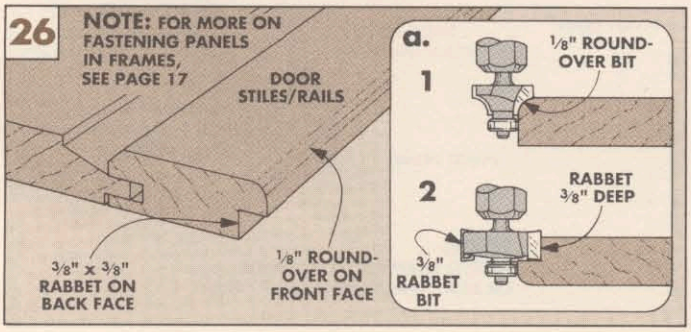

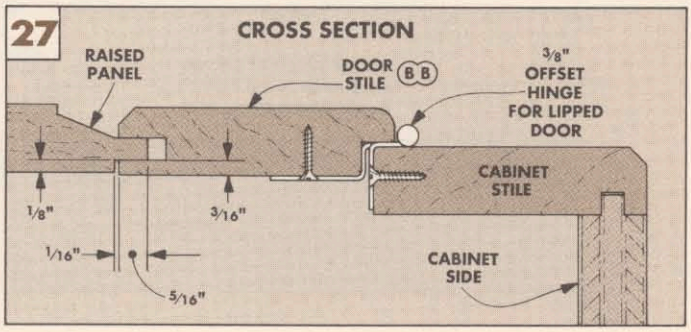

Arched Molding

Probably the most interesting feature of the Armoire shown on pages 18 to 25 is the arched top molding. This curved top is typical of armoires, but it can also be found on the top of grandfather clocks and even above house windows.

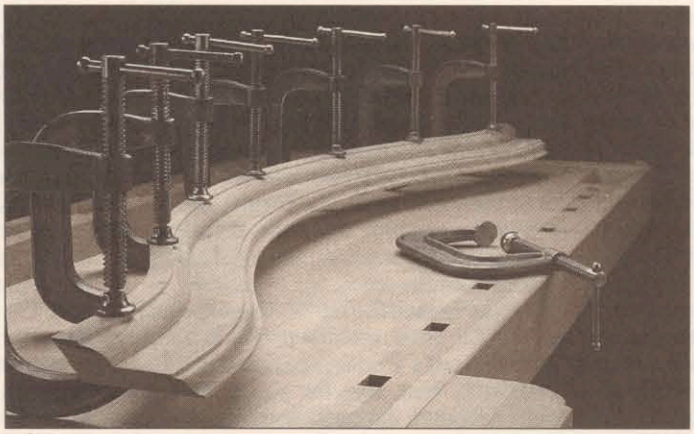

TRADITIONAL TECHNIQUES. Since most arches are made from very thick wood, there are two methods that have traditionally been used to make an arched top — carving with chisels by hand, or using a shaper with molding cutters.

The problems with carving by hand are obvious. It takes time, the correct tools, and most of all considerable skill to carve the coves and convex parts of such a curved molding.

A shaper could be used, but it's not a piece of equipment found in many home shops. And, with a shaper, you're limited to the profiles made by the available cutters. The profile on the Armoire would require a very deep (and expensive) cutter.

BUILD UP THE MOLDING. For the arched molding shown here, I used a different technique. The molding is actually three separate pieces of ¾"-thick stock glued together. This gives the appearance of one thick piece.

To get all three pieces the exact same shape, I started by making a template that defined the curve on the top (see below). Then I cut the pieces to match the template, and routed a profile on *each piece* with a router. Finally, I cut the bottom edges and assembled all three pieces so the top edges were flush.

PROFILES. This technique combined with all of the router bit profiles available gives you the ability to make an infinite variety of thick, curved moldings. (On the Armoire, we only used two common router bits to form the entire profile shown in the photo above — a ¼" Roman ogee bit and a ½" round-over bit.)

CUTTING THE ARCH

The easiest technique for making all of the pieces for a built-up, curved molding is to start by making a template. Then, this template can be used as a guide for marking, cutting (with a sabre saw or band saw), and trimming (with a flush trim router bit) all of the pieces so the top edge of each piece follows the exact same shape.

THE TEMPLATE

To make the template for the Armoire, I used ¼"-thick Masonite. Begin by cutting the Masonite 13½" wide and 51½" long, see Step 1 in in Fig. 1. This makes the template long enough to use on both molding pieces (S, U) as well as the top rail (N). (Note: The Armoire measurements are given here, but you could change the measurements to use this technique for an arched top of any size.)

REFERENCE LINES. I made the template into a "story stick" by laying out vertical reference lines with measurements taken from the Armoire cabinet.

To do this, first mark a centerline on the

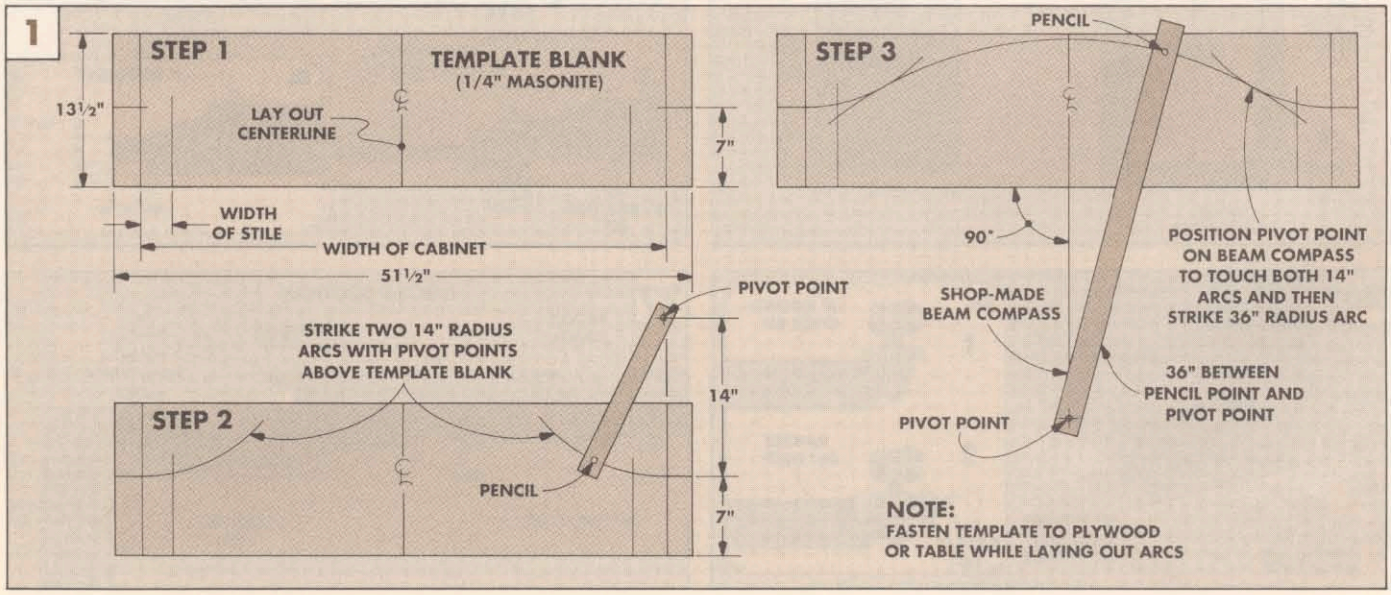

length of the template blank, see Step 1 in Fig. 1. Then mark vertical reference lines at both ends of the template to indicate the overall width of the cabinet (47½" in my case).

Next, mark a second set of vertical lines to indicate the outside of the door openings. To determine this measurement, I measured in from the first set of lines the width of the stiles (3" in my case).

Finally, mark horizontal lines at both ends 7" up from the bottom to indicate where the arched curve meets the end of the template.

THREE ARCS. Now the arched curve can be laid out by drawing three arcs. First, two small arcs are laid out from above the left and right corners of the template, see Step 2 in Fig. 1. Then a large connecting arc is laid out with its centerpoint below the bottom edge of the template, see Step 3.

To mark these arcs, I made simple beam compasses from strips of Masonite with a pivot hole for a nail near one end and a pencil hole near the other end. For the shorter beam compass, locate the pencil hole 14" from the pivot hole, see Step 2. On the longer beam compass, locate the pencil hole 36" from the pivot hole, see Step 3.

Next, fasten the template blank down on a sheet of plywood or a large table. (I held it with double-sided carpet tape.)

To draw the two smaller arcs, position the pivot point of the beam compass in line with the outside vertical reference lines and 14" above the horizontal reference lines, see Step 2 in Fig. 1. Then draw the arcs.

To draw the 36"-radius center arc, position the pivot point of the longer beam compass directly below the centerline on the template, see Step 3. Then align the pencil point to *just touch* the two 14"-radius arcs. After locating the pivot point, strike the large arc.

CUT TO SHAPE. Now cut the arched top of the template a little oversize with a sabre saw or band saw and sand right to the line.

TOP RAIL

Now you can use the template to cut the arch on the top rail for the Armoire.

RAIL BLANK. Begin making the top rail by edge-gluing a blank from ¾" stock. (Shop Note: To hide the joint line, try to match grain pattern and color between pieces.)

For the Armoire, I cut the top rail blank to a width of 13½" and to length to fit between the cabinet stiles (41½" in my case), see Fig. 2. Then mark a centerline on the bottom edge of the blank.

MARK AND CUT OUT ARCH. After the centerline is marked, lay the template on top of the rail blank and align the bottom edges and centerlines. Then draw the outline of the arch on the blank, see Fig. 2.

Now remove the template for a minute and cut out the shape, staying about ⅛" *outside* the pencil line, see Fig. 2a. (Shop Note: Since this workpiece is so large, I found it easiest to use the sabre saw for this cut.)

FLUSH TRIM SMOOTH. Now, here's the trick for making the top rail the *exact* same shape as the template (and the other two molding pieces you will make later).

First, screw the template to the blank, aligning the bottom edges and centerlines, see Fig. 3. (Note: The screw holes will be covered later by the moldings if you position them 1¾" down from the arched edge.)

Next, turn the blank and template upside down and clamp them down to your bench, see Fig. 4. Then mount a flush trim bit in your router and lower the bit so the bearing rides against the template, see Fig. 4a.

Now when you run the router bearing along the template, the bit will trim the edge of the blank smooth and to the exact shape of the template.

CUT OFF BOTTOM. After the arched top edge is trimmed to shape, the bottom edge has to be cut parallel to the top. Even though the edges are parallel, the radii for the bottom edge are different from those on the top, so you can't use the same template.

To mark the bottom edge of the rail exactly parallel to the top edge, I used a scribing stick. This scribing stick is just an 8"-long piece of Masonite with two nails driven in at one end, see Fig. 5a. After driving the nails, drill a pencil hole 6⅞" from the nails.

Now, with both nails riding along the top of the arch and a pencil in the hole, scribe the bottom edge on the blank, see Fig. 5. Then cut the bottom edge to shape slightly outside the line and sand up to the line.

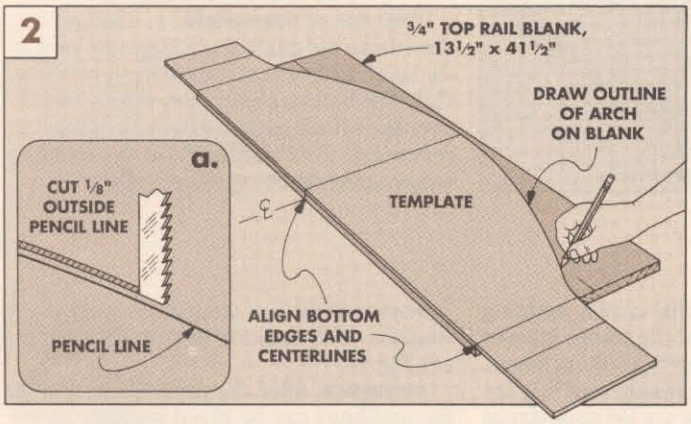

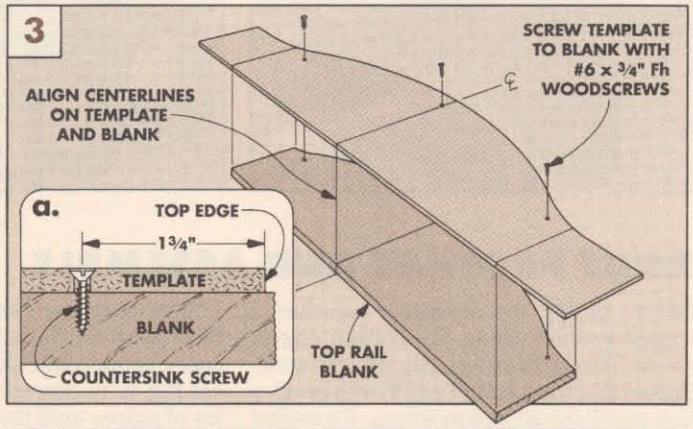

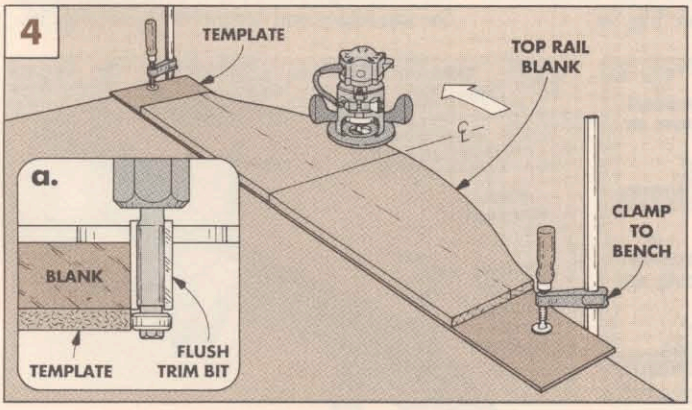

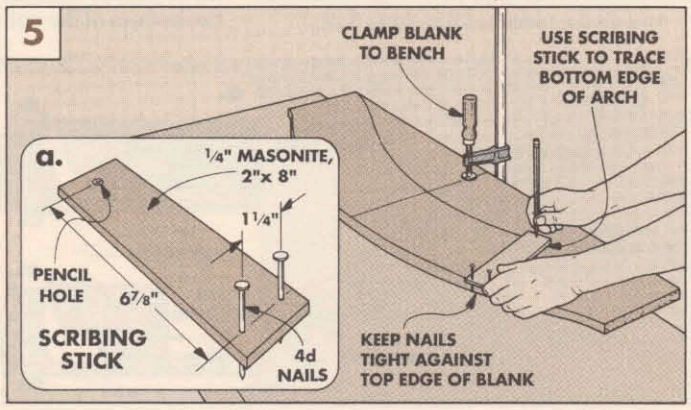

ARCHED MOLDING

On the Armoire, the arched top rail (explained on the previous page) serves as a foundation for the actual arched molding. The molding itself is made from two pieces glued together — a base piece (S) with a Roman ogee routed along the bottom edge and a trim piece (U) with a round-over on the bottom edge.

CUT FROM ONE BLANK. Both pieces can be laid out and cut from one blank, see Fig. 6. For the Armoire, I started by edge-gluing a blank 12" wide and 51½" long.

After the glue dries, plane the blank flat and draw a vertical line centered on the length, see Fig. 6.

TOP EDGE. The process for cutting the top edge of each piece is exactly the same as on the top rail. I used the same template as with the top rail and marked and cut the top edge slightly oversize, refer back to Fig. 2. Next screw the template to the blank (Fig. 3) and trim the piece flush with the router (Fig. 4).

BOTTOM EDGE. To cut the bottom edge, you could use the same process as on the top rail. (Mark with a scribing stick as shown in Fig. 5 and then cut with a sabre saw.) But I tried something a little different here. Since both pieces are narrower, I used the band saw to get a more uniform cut.

To do this, clamp a pointed guide block to the band saw table so the distance between the blade and the block is about 1/16" wider than the finished width of the molding, see Fig. 7. (The 1/16" will be sanded off later.) For the base molding (S) on the armoire, clamp the block 3 5/16" from the blade.

Now cut the bottom edge of the molding by running the top (routed) edge against the guide block.

SECOND MOLDING. After cutting the base molding strip (S), you can follow the whole procedure over again for the trim molding strip (U). When cutting the bottom edge of this piece on the band saw, clamp the guide block 1 5/16" from the blade.

SAND TO WIDTH. At this point, each molding piece should be fairly uniform in width, but about 1/16" oversize and have a rough bottom edge from the band saw cut. I smoothed the bottom edge with a sanding drum on the drill press, see Fig. 8.

To do this, clamp a curved (convex) guide block to the drill press table and feed the molding strip between the block and the sanding drum. The convex curve on the guide block should match the concave curve on the top edge of the molding. (Shop Note: I used a convex section of the waste left over from cutting the strips from the blank.)

Clamp the guide block so the sanding drum will sand the molding strip *very lightly*. Then feed the strip with a *steady* movement from left to right. (Don't stop or you'll get a divot in the molding strip.)

Take two or three passes at each setting, then move the guide block slightly closer to the sanding drum and repeat the procedure. Once the bottom edge of the strip is smooth over its entire length and the strip is the correct width (3¼" and 1¼" for the molding strips on the Armoire), stop sanding.

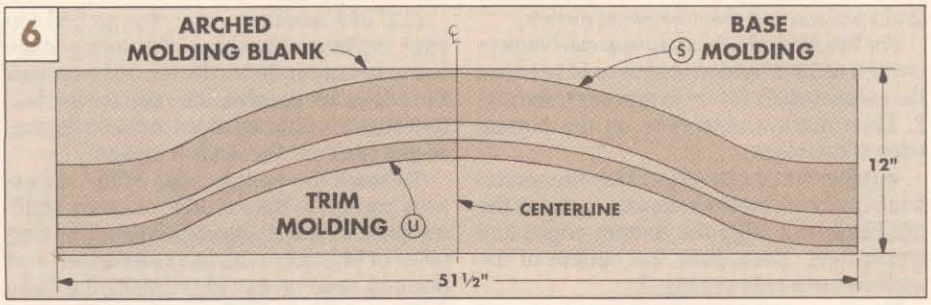

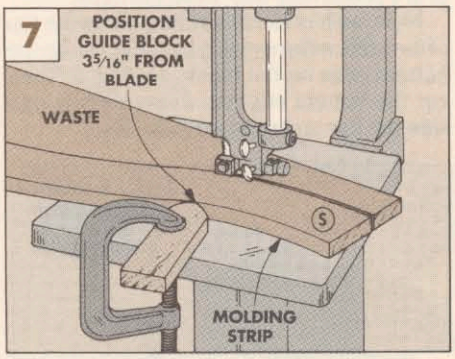

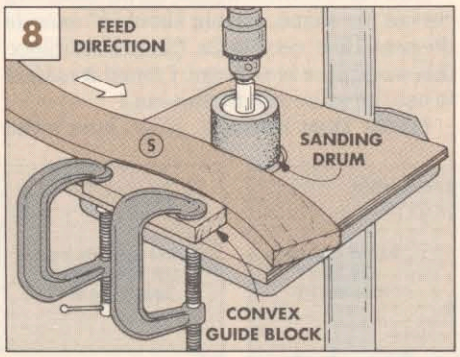

ROUT PROFILES AND ASSEMBLE

Before gluing the moldings together, I routed profiles along the bottom edges. (Note: The Armoire also has straight moldings on the sides, parts T and V, with profiles that match the arched moldings. It's easiest to rout all the pieces at the same time.)

ROMAN OGEE. For the crown molding base strips (S,T), I used the router table to rout a Roman ogee along the bottom edges, see Fig. 9. To prevent chipout, rout in a series of passes until there's a 1/8" shoulder at the bottom of the cut, see Fig. 9a.

ROUND-OVER. For the trim strips (U,V), I routed a ½" round-over with a 1/8" shoulder, see Fig. 9a.

ASSEMBLY. After the profiles are routed, the moldings can be glued together (align the top edges and centerlines), see Fig. 10.

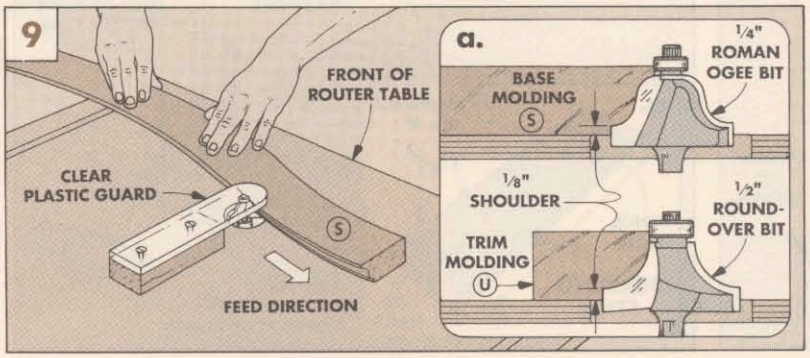

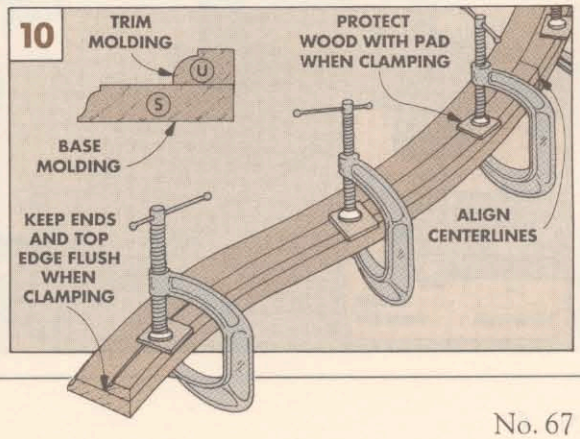

MITERING THE ENDS

Once you've glued the two arched molding strips together you're faced with another interesting challenge. How do you cut clean, straight miters on the ends of a piece that's 1½" thick, 51½" long, and shaped like a boa constrictor?

And, if that's not enough of a problem, the two miters have to be the correct distance apart or the molding won't fit the cabinet.

MITERING CARRIAGE. To solve all of this, I approached the last problem first. I figured if I could cut miters the correct distance apart on the ends of a *straight* board, I could transfer this measurement to the arched molding. That led to the idea of using a simple carriage (cut to the correct length) to hold the arched molding while cutting the miters on both ends.

CARRIAGE BASE. To make the carriage, start by cutting a base from a piece of ¼" plywood or Masonite. Cut the base to a width of 11" and 48" long, see Fig. 11.

FENCES. Then screw ¾"-thick fences on top of the panel along the front and back edges, see Fig. 11a. Keep the screws at least 2" from each end so you won't hit them when cutting the carriage to length.

MITER ONE END. Next, clamp your table saw miter gauge to the back fence near one end of the carriage and set the carriage on top of the saw, see Fig. 12. Then tip your saw blade to 45° and trim just a little bit off one end of the carriage. (Don't cut the molding yet, just cut the carriage for now.)

Shop Note: You can also use this carriage on a radial arm saw without a miter gauge. Just tip the blade to 45° and hold the carriage tight against the fence when cutting.

MITER TO LENGTH. The trick comes in cutting the miter on the other end of the carriage to the correct length. To determine the finished length of the molding, measure the exact outside width of the cabinet. (In my case, the Armoire measured 47½".)

Then, to cut the carriage to this length, I unclamped the miter gauge and turned the carriage around so the other fence is against the miter gauge. Next, make a series of cuts sneaking up on the final dimension until the distance from *long point-to-long point* of the miters measures the same as the outside width of the cabinet, see Fig. 12a.

Wait a minute. I thought you said you were going to cut the carriage the same length as the finished arched molding. To fit the cabinet, wouldn't that be from *short point-to-short point* of the miters?

This may seem a little confusing. But remember, you're going to be setting the molding on *top* of the carriage for cutting. So the long points on the top of the carriage base will actually become the short points on the back of the molding, see Fig. 12a.

MOUNT THE WORKPIECE. Once the carriage is cut to the correct length, draw a line across it centered on the length, see Fig. 13. Then you can mount the arched molding on top of the carriage.

To cut an even amount off both ends, align the centerlines on the molding with the centerline on the carriage, see Fig. 13. And keep both "feet" of the arch (low points) tight against one of the fences. (I used double-sided carpet tape to hold the molding in place, but you could screw through from the bottom of the carriage into the back of the molding.)

MITER ONE END. After the molding is mounted in position, clamp the miter gauge to the back fence so the saw blade aligns with the miter cut on the end of the carriage, see Fig. 13. Then trim one end off the molding at a 45° angle.

CUT TO LENGTH. Next, turn the carriage around and clamp the miter gauge to the other fence so the blade aligns with the miter on the other end. Then cut the molding to the finished length. Now the short points on the molding should just fit the outside edges of the cabinet.

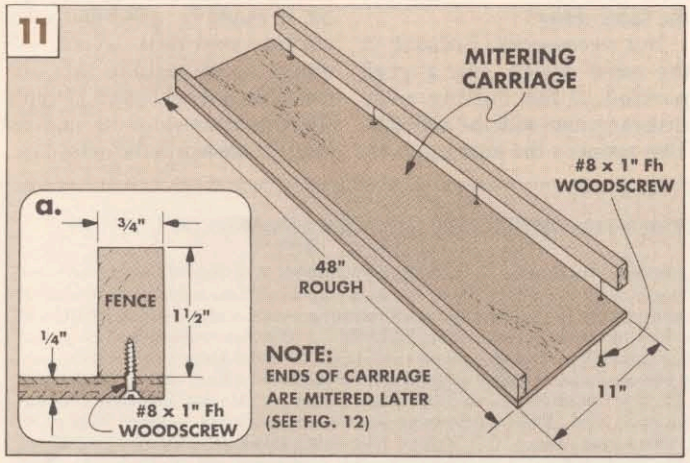

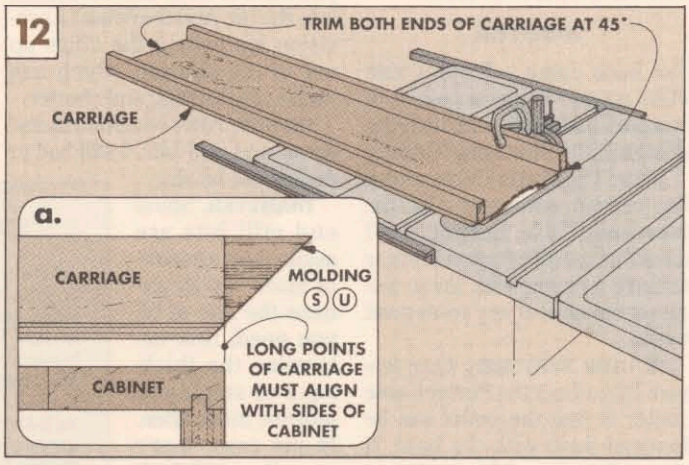

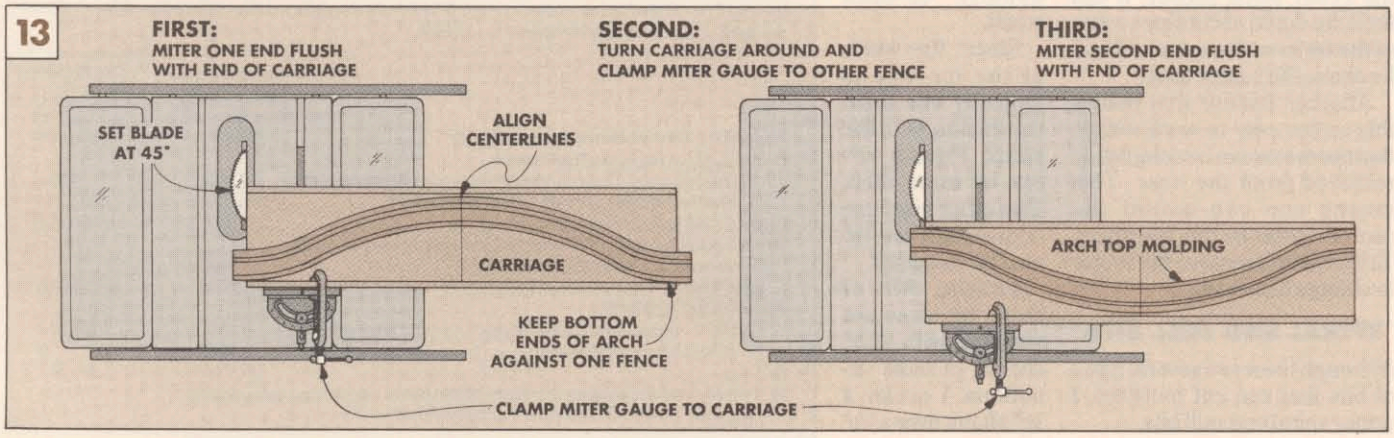

Talking Shop

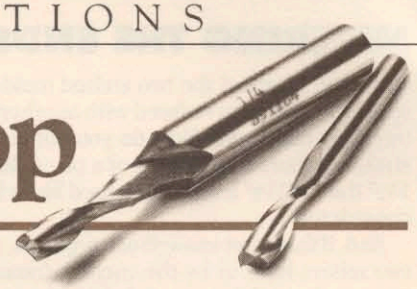

MORTISING: ROUTERS AND BITS

■ The only real difference between cutting mortises by hand and using a machine is speed.

In the past, I've cut mortises with a drill press. This involves drilling a series of holes, and then cleaning them out with a chisel. (For more on this technique, see *Woodsmith* No. 64.)

While this method works fine, an even faster method is to rout out the mortise with a router. But, to rout mortises you need three things: a router, the correct bit, and some means of accurately aligning the cuts.

The Mortising Table shown on pages 12 and 13 is an easy way to align mortises and cut them with a router. But . . . what kind of router is best to use on this table, and what kind of bit?

ROUTER

I've been using a Porter-Cable #690 router. It has a couple of features that work well with the design of the Mortising Table.

Note: The Porter Cable router has certain advantages for the Mortising Table, but you *don't need* this specific router. It's nice to have a router with these features, but almost any router will work.

ROUTER FEATURES. One feature I like about the Porter Cable router is that the collet can be lowered flush with the base. If the collet stops higher, it can limit the depth of cut since some of the bit's cutting edge will still be above the router base.

Another feature that makes this router easy to work with is that the motor can be completely removed from the base. This means you can mount the router's base to the Mortising Table but still remove the motor to change bits easily.

SPIRAL END MILL BITS

Although there are several types of bits that can cut mortises, I prefer spiral end mill bits.

FEATURES. These bits are specifically designed to do one thing — cut mortises. They have the plunging ability of a drill bit combined with a spiral cutting edge that cuts side-to-side like a router bit.

The spiral on these bits have an "up-cut" design. Up-cut refers to direction of the spiral, and means that the chips are pulled up out of the mortise to eliminate build-up and clogging.

Okay, but why can't I just use a carbide-tipped straight bit? You can, but it's not the best choice. Straight router bits have one or two *straight* cutting edges which run in-line with the shank. Because the cutters are not designed to plunge (drill), you have to force the workpiece into the bit. And there isn't a provision for pulling the chips up out of the mortise, which can cause overheating and chatter.

BIT SIZE. After I decided to use spiral end mill bits, I still had to decide the bit size.

DIAMETER. Spiral end mill bits are available in a variety of sizes. To determine the size of bit you need, first determine the thickness of stock you mortise most often. In my case, that's usually ¾"-thick stock.

Since, the width of the mortise is typically one third the thickness of the stock, I use a ¼"-dia. bit most often. Two other bits I use occasionally are ⅜" and ½" diameter.

SHANK. All of these bit sizes are available with a ½" shank. In most situations, I prefer a ½" shank over a ¼" shank. The thicker shank gives the bit extra stability.

However, there is one drawback. The cutter length on a ¼"-diameter bit with a ½" shank is only 1" long, see bit on the left in the photo. So you can't cut a mortise deeper than 1" with this bit. Larger diameter bits have longer cutter lengths to make deeper mortises.

MATERIAL. Once you've determined the size of bits you need, you still have a choice of the type of material the bit is made from.

The spiral bits most readily available are made from high speed steel.

Wait a minute, my first router bits were high speed steel and they started burning the first time I used them. Won't these do the same thing?

Not necessarily. Because of the spiral design, only a small portion of the cutting edge makes contact with the material. This reduces the amount of resistance and burning.

As an alternative to high speed steel bits, several mail order companies offer solid carbide spiral end mill bits, see Sources on the next page.

The main difference between solid carbide bits and high speed steel bits is the same as the difference between standard saw blades and carbide-tipped blades. Carbide stays sharp for a long time. This means you can cut a lot of clean mortises.

CONCLUSION. So what kind of bits should you have? Well, if I really needed to make large mortises, and I had a router that accepted bits with a ½" shank, I'd buy high speed steel spiral end mill bits.

But, if I were to buy just one bit, it would be a ¼"-dia. solid carbide end mill. (Note: ½" shank solid carbide bits are available, but expensive.) I think the smoothness of cut and its long life are worth the extra cost.

STATEMENT OF OWNERSHIP, MANAGEMENT AND CIRCULATION
(Required by 39 U.S.C. 3685)

1. Title of Publication: Woodsmith. 1a. Publication No.: 0164-4114. 2. Date of Filing: September 27, 1989. 3. Frequency of issue: Bimonthly. 3a. No. of issues published annually: 6 (six). 3b. Annual subscription price: $12.95. 4. Complete mailing address of known office of publication: 2200 Grand Avenue, Des Moines, (Polk County), Iowa 50312-5306. 5. Complete mailing address of the headquarters of general business offices of the publisher: 2200 Grand Avenue, Des Moines, Iowa 50312-5306. 6. Full names and complete mailing address of publisher, editor, and managing editor: Publisher and Editor: Donald B. Peschke, 2200 Grand Avenue, Des Moines, Iowa 50312; Managing Editor: Douglas L. Hicks, 2200 Grand Avenue, Des Moines, Iowa 50312. 7. Owner: Woodsmith Corporation, 2200 Grand Avenue, Des Moines, Iowa 50312; Donald B. Peschke, 2200 Grand Avenue, Des Moines, Iowa 50312. 8. Known bondholders, mortgagees, and other security holders owning 1 percent or more of total amount of bonds, mortgages or other securities: None. 9. (Does not apply.) 10. Extent and nature of circulation:

	Average no. copies each issue during preceding 12 months	Actual no. copies of single issue published nearest to filing date
A. Total no. copies printed (net press run)	287,974	295,800
B. Paid and/or requested circulation:		
1. Sales through dealers, street vendors and counter sales	4,414	4,654
2. Mail subscriptions (paid and/or requested)	266,013	254,334
C. Total paid and/or requested circulation	270,427	258,988
D. Free distribution by mail, carrier or other means, samples, complimentary, and other free copies	124	0
E. Total distribution	270,551	258,988
F. Copies not distributed		
1. Office use, left over, unaccounted, spoiled after printing	17,095	36,812
2. Returns from news agents	328	0
G. Total	287,974	295,800

11. I certify that the statements made by me above are correct and complete.
(signed) Donald B. Peschke, Publisher/Editor

Sources

HIGHCHAIR: PATTERN

Full-size patterns for the highchair's seat back and for a template to rout the tray recess are available from **Woodsmith Project Supplies**. Note: These patterns are *only* for the seat back and tray. They do not include the legs or any other parts.

Highchair Patterns

- **767-125** Highchair Seat Back/Tray Patterns..... $3.50

HIGHCHAIR: HARDWARE PACKAGE

A hardware package for the Highchair is also available. The package includes all hardware needed to build the highchair, plus a three-piece safety strap, and the hardware used to mount the tray (spring-loaded latches that swivel the tray out of the way, see the photo on page 32).

Highchair Hardware

- **767-100** Highchair Hardware Package $19.95
  (1) Full-Size Patterns of the seat back and template for routing the tray recess
  (1) Nylon Safety Strap
  (10) 1½"-Long (40mm) Confirmat Knock-Down Screws
  (2) Tray Latches with Mounting Screws and Catch Rods
  (7) #8 x ⅝" Pan Head Screws
  (3) Finish Washers
  (2) 1¼" Drywall Screws

ROUTER BITS

The carbide-tipped router bits needed to rout out the highchair's tray are available from **Woodsmith Project Supplies.** (See other suppliers below.)

Router Bits

- **271-721** ½" Corebox Bit (with ¼" shank) $21.95
- **271-730** ½" Corebox Bit (with ½" shank) $25.95
- **764-200** ½" Roundover Bit (with ¼" shank) $26.95
- **764-250** ½" Roundover Bit (with ½" shank) $28.95
- **767-140** ¾" Straight Bit (with ¼" shank) $14.95
- **767-150** ¾" Straight Bit (with ½" shank) $16.95

GUIDE BUSHING. When routing the tray recess, you will need a guide bushing (or template guide) to fit the base of your router. Almost all router manufacturers offer a guide bushing as an accessory. Check with your local dealer.

A universal base plate and guide bushing set that will fit any router is also available from some of the catalogs below.

MORTISING TABLE: HARDWARE

All the hardware needed for the Mortising Table is available as a package from **Woodsmith Project Supplies.** This package includes just the hardware. (You provide the plywood.)

Mortising Table Hardware

- **767-225** Mortising Table Hardware Package.....$34.95
  (1) 7¾" x 11¾" Phenolic Plastic Router Base
  (1) Transparent Orange Safety Guard
  (4) 1¼"-Dia. Knobs with ¾" - Long, ¼"-20 Threads
  (4) ¼" I.D. Threaded Inserts
  (4) 1¼" O.D., ¼" I.D. Washers
  (8) 1¼" Fh Drywall Screws

MORTISING TABLE: COMPLETE KIT

There is also a complete ready-to-assemble kit that includes everything listed above plus the pre-cut plywood.

The plywood is Baltic Birch (13 ply, 11/16"-thick) with the threaded inserts already installed. All you have to do is cut a slot for *your* miter gauge and an optional hole to fit *your* shop-vac hose. Then glue and screw the parts together and mount the router to the phenolic base.

Ready-To-Assemble Mortising Table Kit

- **767-200** Complete Mortising Table Kit $74.95

MORTISING BITS

The spiral end mill router bits for the Mortising Table are available from **Woodsmith Project Supplies** (or from some of the catalogs listed below).

Solid Carbide End Mill

- **767-250** ¼" Mortising Bit, Solid Carbide, ¾" Cutting Length, ¼" Shank..... $19.95

High Speed Steel End Mills

- **278-658** ¼" Bit, ¾" Cutting Length, ½" Shank..... $12.95
- **278-664** ⅜" Bit, 1¼" Cutting Length, ½" Shank . $14.95
- **278-667** ½" Bit, 1½" Cutting Length, ½" Shank..... $15.95

ARMOIRE

A package of the hardware needed for the Armoire is available from **Woodsmith Project Supplies** (or from some of the catalogs listed below).

Armoire Hardware

- **767-300** Armoire Hardware Package $34.95
  (3pr.) ⅜" Brass Plated Hinges
  (2) Pierced Cast Brass Plates
  (2) Solid Brass Knobs
  (2) Brass Ball Door Catches
  (28) Pin Type Shelf Supports

RAISED PANEL BIT

The raised panel bit (¼" shank) needed to make the doors on the Armoire is available from **Woodsmith Project Supplies** (or from the Sears catalog).

Raised Panel Bit

- **767-325** Raised Panel Carbide-Tipped Bit $22.95

ORDER INFORMATION

BY MAIL

To order by mail, use the form enclosed with a current issue or write your order on a piece of paper, and send it with your check or money order. (Please include $3.50 handling and shipping charge with each order.) IA residents add 4% sales tax. Send order to:

Woodsmith Project Supplies
P.O. Box 10350
Des Moines, IA 50306

BY PHONE

For faster service use our Toll Free order line. Phone orders can be placed Monday through Friday, 8:00 AM to 5:00 PM Central Standard Time.

Before calling, have your VISA or Master Card ready.

1-800-444-7002

Allow 4 to 6 weeks for delivery. Note: Prices subject to change after September, 1990.

ALTERNATE CATALOG SOURCES

Similar hardware and supplies may be found in the following catalogs, However styles and sizes may vary. Please refer to each catalog for ordering information.

Garrett Wade
161 Avenue of the Americas
New York, NY 10013
Router Bits, Mortising Bits

Woodcraft Supply
P.O. Box 1686
Parkersburg, WV 26102
Router Bits, Mortising Bits

Woodworker's Supply
5604 Alameda, NE
Albuquerque, NM 87113
Router Bits, Mortising Bits

The Woodworkers' Store
21801 Industrial Blvd.
Rogers, MN 55374
High Chair, Router Bits

Final Details

Armoire

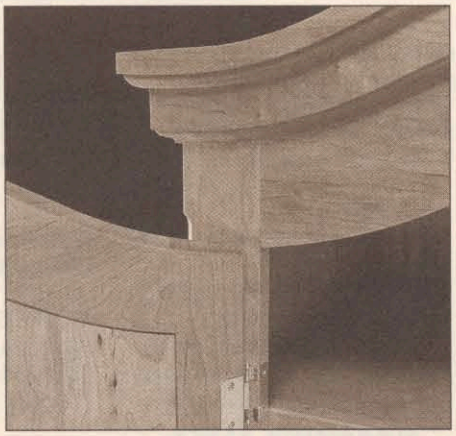

▶ *An arched-top door mirrors the graceful arch of the top molding. Offset brass hinges wrap completely around to the inside of the lipped door.*

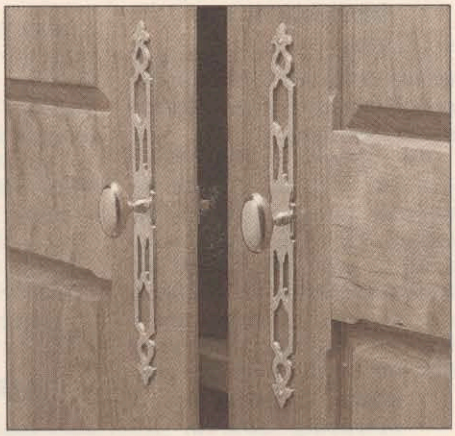

▶ *Solid cast brass oval pulls along with the slender, decorative brass back plate are centered on the stiles of the doors.*

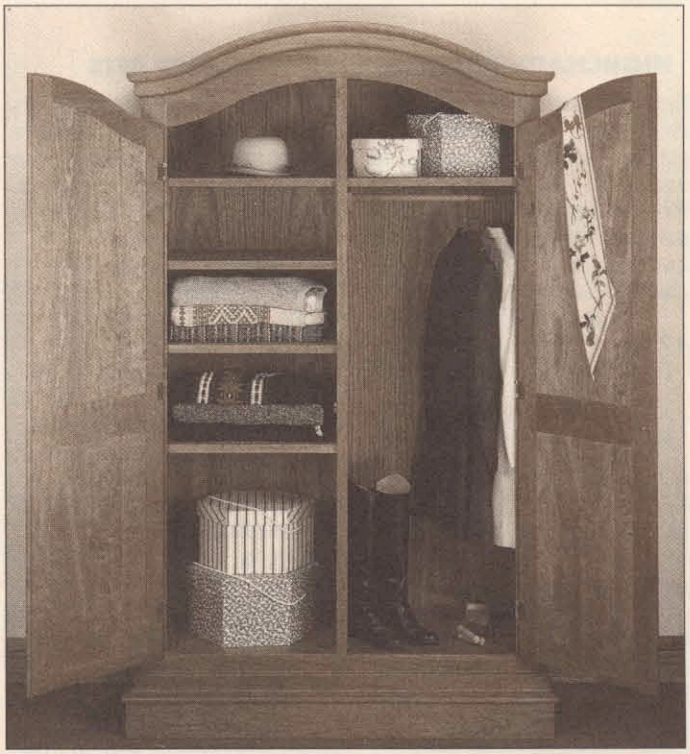

▲ *With both doors open you can really see all the storage possibilities in this seven foot tall Armoire. Add another closet rod to create more hanging space. Or, if you prefer, you can place adjustable shelves on both sides of the cabinet.*

Highchair

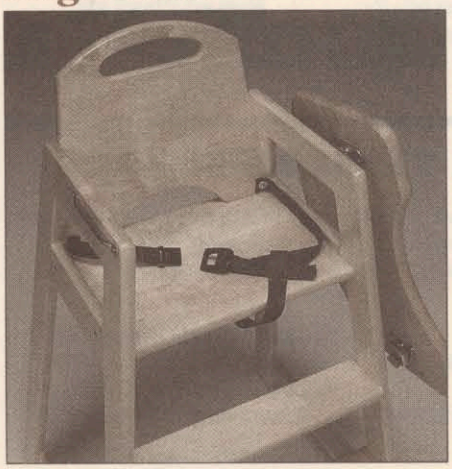

▲ *A nylon safety strap is available for the Highchair. Also available is special hardware that lets the tray swing out of the way and hang alongside until needed.*

Mortising Table

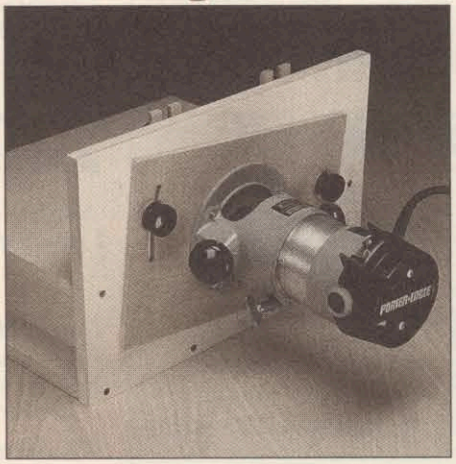

▲ *This shop-built Mortising Table makes quick work out of cutting acccurate mortises. Part of this accuracy is the simple height adjustment plate shown above.*

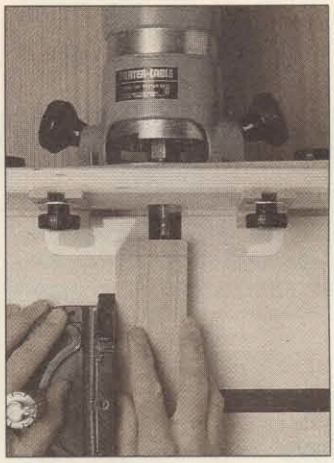

▲ *You get an unobstructed view of the cuts you're making. Plus the guard keeps your fingers away from the bit.*